Land Use Application

Applicant(s): Nicholas Schirmer, Powder River Development Services for American Tower Corp.

Property Owner(s): Scott Alan Hall & Wendy D. Jaekel-Hall

Mailing Address: 408 S Eagle Rd. Ste 200., Eagle, ID 83616

Mailing Address: 9650 State Rt. 14, Goldendale, WA 98620

Phone: (208) 501-7049

Phone: (563) 726-2675

Email: nicholas.schirmer@powderriverdev.com

Email: jessica.verre@americantower.com

Location of property:

Township: 2N

Range: 15E

Parcel address: 02150300000600 184 Rattlesnake RD, Centerville, WA

Section & Qtr. Section: 3 1/4

County: Klickitat

Tax Lot No(s).: 800

Parcel Size (acres): .92

Existing use of parcel: wireless communications

Use of adjacent parcels: Open space, additional wireless communications facilities

Project description: This should include all proposed activities and details on size, height, exterior colors, and construction materials of proposed structures. Any areas of ground disturbance and landscaping details should also be described. It is important to describe all aspects of your project so that you may gain approval for all of the development activities you plan to do.

Installation of (1) new concrete generator pad, (1) new generator, (1) new concrete propane tank pad, and (1) new propane tank.

Exterior Materials and Colors – Generator and tanks are made of metal and will be painted to blend in with the existing equipment/environment, usually a tan or light grey color.

No ground disturbance or changes to the site's existing landscaping elements is proposed.

Application checklist: The following is required to complete your application:

- ☒ Application form completed and signed
- ☒ Site plan
- ☒ Key viewing areas checklist, elevation drawings, and landscape details, if required
- ☒ Names and addresses of adjacent property owners, if required
- ☒ Any additional information as required

Signature of the property owner(s) indicates that the property owner(s) is/are aware that an application is being made on the subject property. **Signature of the property owner(s) also authorizes the Gorge Commission or the Commission's designee(s) reasonable access to the site in order to evaluate the application.**

Applicant Signature: Nicholas Schirmer date 4.5.19

date

Property owner(s) signature: Scott Alan Hall date 4-11-10

Wendy D. Jaekel-Hall date 4-11-10

Site Plan

A plan drawn in black ink at a scale of 1 inch equals 200 feet (1:2400) or at a scale providing greater detail must be included with the application.

If the parcel is very large, you may show on the portion of the parcel affected by the proposed use. Be sure, however, to show enough of the parcel or some adjacent features, such as roads, so that the planners can orient themselves on your map. A small vicinity map showing the subject parcel and surrounding parcels may help.

At a minimum, you must show the following features; other site plan information may be required depending on the type or location of development being proposed.

- ☒ applicant(s) name
- ☒ location and width of existing and proposed roads, driveways, and trails
- ☒ scale and north arrow
- ☒ location and size of all existing and proposed structures
- ☒ boundaries of parcel with dimensions and size
- ☒ location of existing and proposed services including wells or other water supplies, sewage disposal systems, power and telephone poles and lines and outdoor lighting
- ☒ significant terrain features or landforms
- ☒ location and depth of all proposed grading and ditching
  groupings and species of trees or other vegetation on the parcel
- ☐ N/A location and species of vegetation that would be removed or planted
- ☐ N/A bodies of water and water courses

***Please use this template or attach a separate site plan**

Site plan (continued): See enclosed survey and Site Plan on Sheet C-1 for details

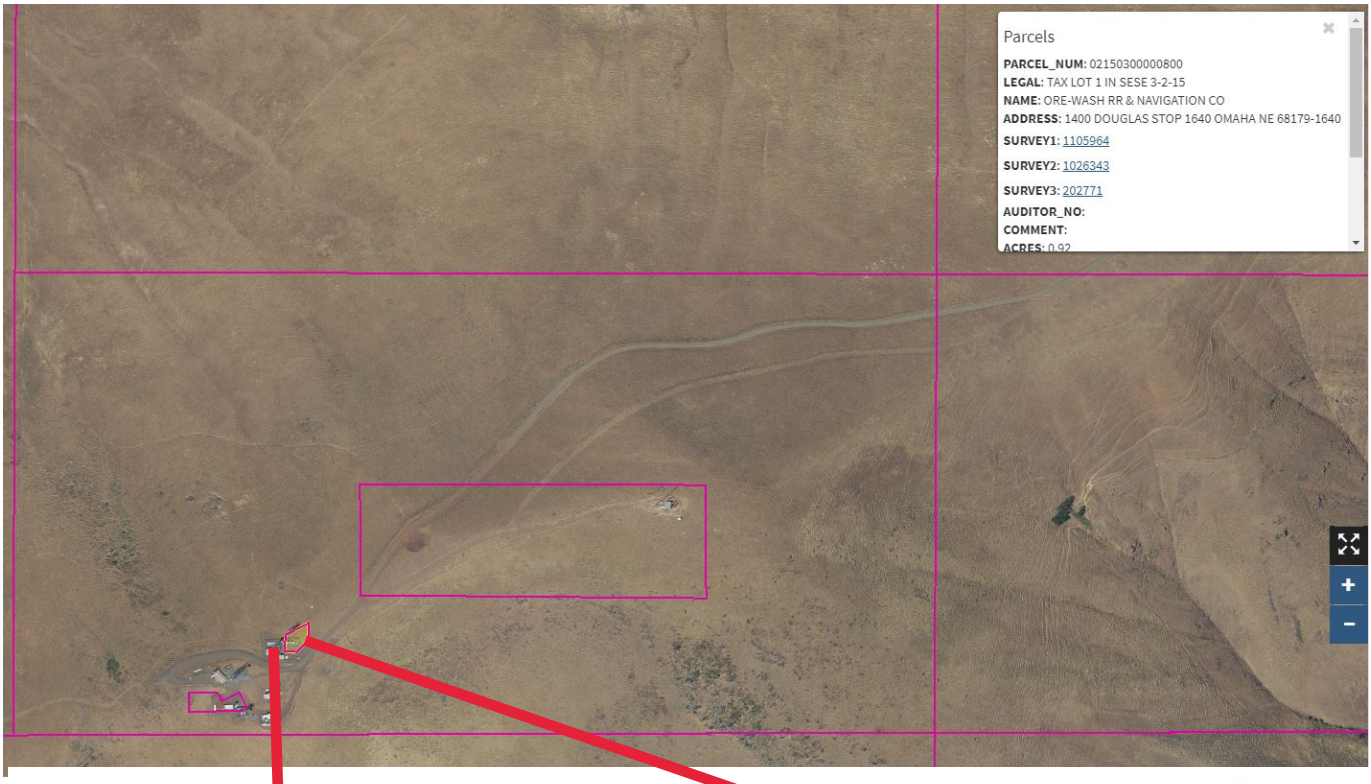

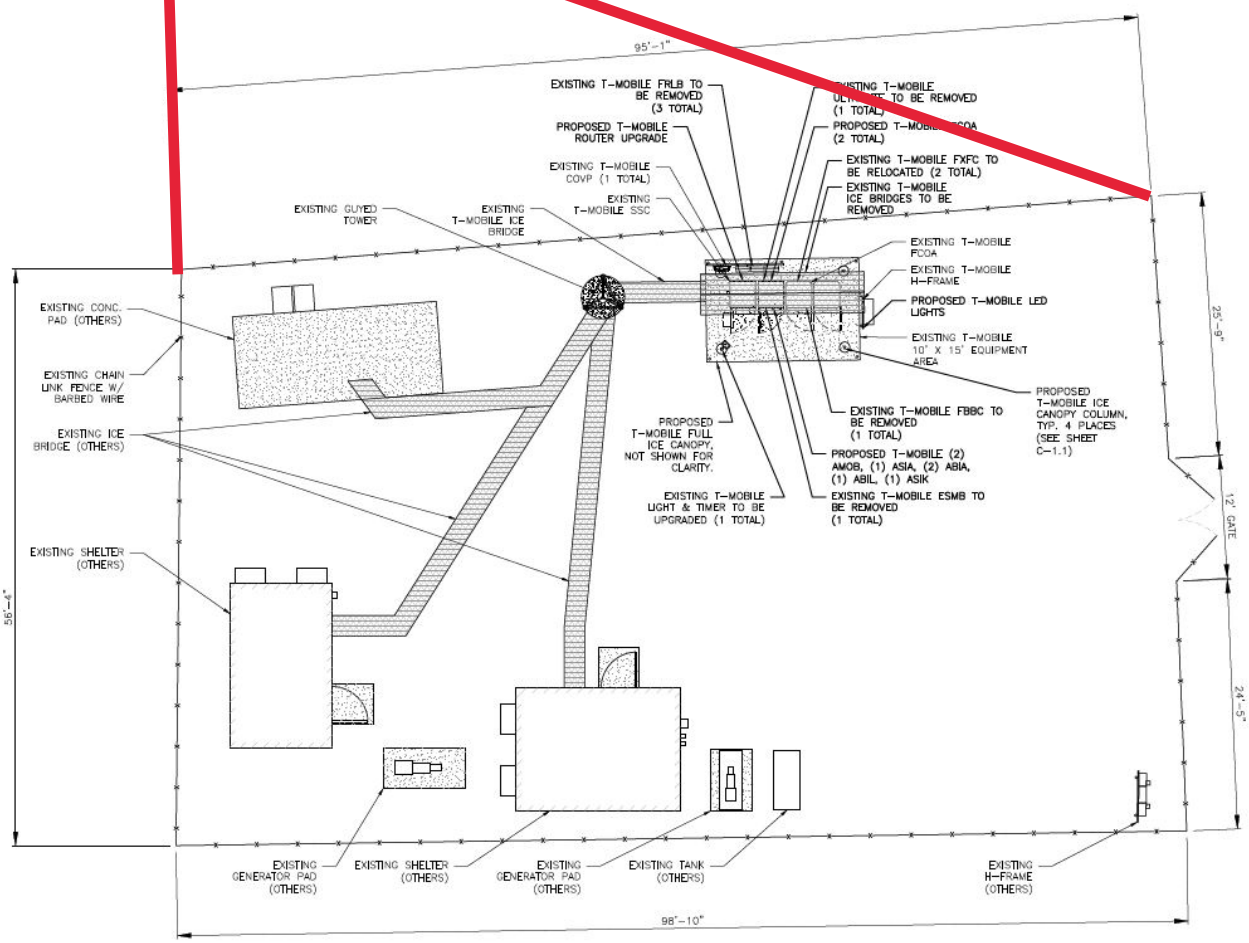

Key Viewing Areas:

Key viewing areas are important public viewpoints and areas that afford opportunities to view the Gorge scenery. Key viewing areas are listed below.

Please check those sites which can be seen from your property:

- ☐ Historic Columbia River Highway
- ☐ Old Highway 8 (County Road 1230)
- ☐ Highway I-84
- ☐ Washington State Route 142
- ☐ Washington State Route 14
- ☐ Washington State Route 141
- ☐ Panorama Point Park
- ☐ Columbia River
- ☐ Rowena Plateau and Nature Conservancy Viewpoint
- ☐ Cook-Underwood Road

Site not visible from any of the locations listed to the left

If your project would be visible from one or more key viewing areas, then you must submit elevation drawings and landscaping details.

Elevation drawings must show the sides of proposed buildings which would be visible from key viewing areas, including:

- ☐ *the appearance of proposed* buildings *over 400 square feet* in *size*
- ☐ *surrounding final grades*

N/A site not visible from key viewing areas

Landscape details must show how your project will be screened from key viewing areas, including:

- ☐ *location of plants used*
- ☐ *number of plants*
- ☐ *size of plants*
- ☐ *type of plants*
- ☐ *irrigation provisions or other measures to ensure the survival of landscaping planted for screening purposes*
- ☐ *location of existing and proposed topographical features which would screen your project.*

Adjacent Property Owners:

If your project is included in one of the categories below, then you must submit names and address of adjacent property owners within a specified distance (200 feet or 500 feet) of the perimeter of your parcel. The following list specifies the distance within which property owners must be notified of your proposal. You only need to provide the names and address (along with the parcel number); the Commission will send the notice.

Your county Assessor's Office can assist you in obtaining this property owner information. You may use the back of this form to record the names and addresses or you may submit forms which the county may provide you.

Notification of landowners within 200 feet:

- ☐ Uses within Residential designation (except single-family dwellings located adjacent to Agriculture or Forest designations - see notification of landowners within 500 feet)
- ☐ Uses within Agriculture designation (except non-farm single-family dwellings in Large-Scale Agriculture designation - see notification of landowners within 500 feet)
- ☐ Uses within Forest designation (except utility facilities, railroads, home occupations, cottage industries, wineries, agriculture product processing and packaging, mineral resources, geothermal resources, aquaculture, boarding of horses, temporary asphalt/batch plants, expansion of non-profit camps-retreats-conference centers, bed and breakfasts, and non-profit learning/research facilities - see notification of landowners within 500 feet)
- ☐ Uses within Commercial designations
- ☐ Uses within Recreation designations
- ☐ Uses within Open Space designations
- ☐ Uses within Agriculture-Special designations
- ☐ Uses within Special Management Areas

Notification of landowners within 500 feet:

- ☐ Single-family dwellings within Residential designation located adjacent to Agriculture or Forest designations
- ☐ Non-farm single-family dwellings within Large-Scale Agriculture designation
- ☐ Utility facilities, railroad, home occupations, wineries, agriculture product processing and packaging, mineral resources, geothermal resources, aquaculture, boarding of horses, temporary asphalt/batch plants, expansion of nonprofit camps/retreats/conference centers, and bed and breakfasts, non-profit learning/research facilities within Forest designations

Adjacent property owners (continued):

Township, Range, Section, Tax Lot Number	Name, Address, and E-mail (if possible)
T2N, R15E, S3 02150300009900	Bonneville Powder Administration ; 5240 Trosper ST SW, Olympia, WA 98512
T2N, R15E, S10 02150300000700	PUD #1 of Klickitat County ; 1313 S Columbus, Goldendale, WA 98620
T2N, R15E, S3 02150300000600	Scott, Hall ; 9650 HWY 14, Goldendale, WA 98620

Projects Requiring Grading Plans:

If your project meets one of the following, then you must submit a grading plan:

In the General Management Area:

N/A

- applications for structural development involving more than 100 total cubic yards of grading (material excavated and/or used as fill) with slopes of more than 10%;
- applications for structural development involving more than 200 total cubic yards of grading (material excavated and/or used as fill) where the building site is visible from one or more Key Viewing Areas

In the Special Management Area:

- applications for structural development involving more than 100 total cubic yards of grading (material excavated and/or used as fill) with slopes of more than 10% (except trails)

The grading plan must include the following:

- ☐ A map of the site prepared at a scale of 1 inch equals 200, feet (1:2;400) or at a scale providing greater detail, with contour intervals of at least every five feet including:
  - Existing and proposed final grades
  - Location of all areas to be graded, with cut banks and fill slopes delineated; and,
  - Estimated dimensions of graded areas.

- ☐ A narrative description of the proposed grading activity, including:
  - Its purpose
  - An estimate of the total volume of material to be moved
  - The height of all cut banks and fill slopes
  - Provisions to be used for compaction, drainage, and stabilization of graded areas (preparation of this information by a licensed engineer of geologist is recommended)
  - A description of all plant materials used to revegetate exposed slopes and banks, including types of species, number of, size and location of plants, and a description of irrigation provisions or other measures necessary to ensure the survival of plantings; and
  - A description of any interim or permanent erosion control measures to be utilized.

Please note: Structural development on slopes greater than 30% is prohibited.

If your project is listed below, you will also need to submit additional information. Contact a Gorge Commission planner for help in identifying the information required.

Projects in the General Management Area:

- ☐ Agricultural Buildings and Agricultural Labor Housing
- ☐ Projects within 1000 feet of sensitive wildlife and plant sites or water resources
- ☐ Single-family dwellings on lands designated Large or Small Woodland
- ☐ Single-family dwellings in conjunction with agricultural use
- ☐ Single-family dwellings not in conjunction with agricultural use (on Large-Scale Agriculture)
- ☐ Single-family dwelling for an Agricultural Operator's Relative
- ☐ Wineries or tasting rooms
- ☐ Temporary Hardship Dwelling
- ☐ N/A Communications and Utility Facilities on lands visible from key viewing areas
- ☐ New livestock grazing; new fences, livestock watering facilities, and corrals; or soil, water, and vegetation conservation activities on lands designated Agriculture-Special
- ☐ Production and/or development of mineral resources and expansion of existing quarries
- ☐ Uses located in or providing recreational access to the Columbia River or its tributaries

Site is not viewable from viewpoint locations

Projects in the Special Management Area:

- ☐ Single-family dwellings on lands designated Forest, Agriculture or Public Recreation
- ☐ Agricultural Buildings and Agricultural Labor Housing
- ☐ Clearing trees for new agricultural use
- ☐ Any new use or development on lands designated Open Space

Projects Requiring Cultural Resources Reconnaissance Surveys and Historic Surveys for Large-Scale Uses:

- ☐ Residential development of two or more dwellings
- ☐ Recreation facilities
- ☐ Commercial or industrial development
- ☐ Public transportation facilities
- ☐ Electric facilities, lines, equipment, and appurtenances that are 33 kilovolts or greater
- ☐ Communication, water and sewer, and natural gas transmission lines, pipes, equipment, and appurtenances

Projects Requiring Sensitive Plant and Wildlife Surveys:

- ☐ Land divisions that create four or more parcels
- ☐ Recreation facilities that contain parking areas for 10 cars, overnight camping facilities, boat ramps, and visitor information and environmental education facilities
- ☐ Public transportation facilities that are outside improved rights-of-way
- ☐ Electric facilities, lines, equipment, and appurtenances that are 33 kilovolts or greater
- ☐ Communication, water and sewer, and natural gas transmission lines, pipes, equipment, and appurtenances (except minor projects as specified in Commission Rule 350-81)

Please contact the Columbia River Gorge Commission's office if you need assistance or have any questions. The Commission recommends scheduling a pre-application meeting to discuss your project with a planner before submitting your application for review. Please call 509-493-3323 or contact us via our website at www.gorgecommission.org.

T · ·Mobile·

ATC ASSET #:
310444

SITE NAME:
HAYSTACK

SITE NUMBER:
PO02600A

FILE NAME:
PO02600A_HAYSTACK_APU_FSA_PCD_030718

LOCATION:
184 RATTLESNAKE ROAD, CENTERVILLE, OREGON 98613

45° 40' 48.399" N, 120° 54' 48.78" W

104' GUYED TOWER
GENERATOR ADD

APPROVALS

THE FOLLOWING PARTIES HEREBY APPROVE AND ACCEPT THESE DOCUMENTS AND AUTHORIZE THE SUBCONTRACTOR TO PROCEED WITH THE CONSTRUCTION DESCRIBED HEREIN. ALL DOCUMENTS ARE SUBJECT TO REVIEW BY THE LOCAL BUILDING DEPARTMENT AND MAY IMPOSE CHANGES OR MODIFICATIONS.

REGULATORY: _____ DATE: _____

DEVELOPMENT MGR: _____ DATE: _____

PROJECT MGR: _____ DATE: _____

RF MGR: _____ DATE: _____

CONST. MGR: _____ DATE: _____

SITE ACQ. MGR: _____ DATE: _____

CARRIER CM: _____ DATE: _____

PROPERTY OWNER: _____ DATE: _____

OPERATIONS MGR: _____ DATE: _____

SITE INFORMATION

TOWER OWNER:	AMERICAN TOWER 10 PRESIDENTIAL WAY WOBURN, MA 01801
SITE ADDRESS:	184 RATTLESNAKE ROAD CENTERVILLE, OREGON 98613
COUNTY:	KLICKITAT
LATITUDE: LONGITUDE: GROUND ELEVATION:	45° 40' 48.399" N° 120° 54' 48.78" W° 2947.7' AMSL
OCCUPANCY TYPE: ZONING JURISDICTION: ZONING CODE: PARCEL NUMBER:	UNMANNED KLICKITAT COUNTY OPEN SPACE 2150300000600
POWER PROVIDER: TELCO PROVIDER:	KLICKITAT COUNTY PUD KLICKITAT PUD

CONTACT INFORMATION

A&E SERVICES:
POWDER RIVER DEVELOPMENT SERVICES, LLC.
408 S. EAGLE ROAD, SUITE 200
EAGLE, ID 83616
CONTACT: TODD ROTGE
PHONE: 541.647.2777
EMAIL: todd.rotge@powderriverdev.com

SITE ACQUISITION:
POWDER RIVER DEVELOPMENT SERVICES, LLC.
408 S. EAGLE ROAD, SUITE 200
EAGLE, ID 83616
CONTACT: SAMANTHA WEIGHT
PHONE: 208.963.4031
EMAIL: samantha.weight@powderriverdev.com

APPLICANT:
T-MOBILE WEST LLC
8960 NE ALDERWOOD RD.
PORTLAND, OR 97220
CONTACT: ADAM SPRAUGE
PHONE: 503-309-1380
EMAIL: christopher.sprague4@t-mobile.com

APPLICANT:
AMERICAN TOWER
10 PRESIDENTIAL WAY
WOBURN, MA 01801
CONTACT: BRANDI SAVAGE
PHONE: 425.306.6965
EMAIL: brandi.savage@americantower.com

VICINITY MAP

SITE PHOTO

DRIVING DIRECTIONS

DIRECTIONS FROM PORTLAND INTERNATIONAL AIRPORT:

DEPART TOWARD NE AIRPORT WAY. BEAR LEFT ONTO NE AIRPORT WAY. TAKE RAMP LEFT FOR I-205 N. ENTERING WASHINGTON. AT EXIT 27, TAKE RAMP RIGHT FOR WA-14 EAST TOWARD CAMAS. PASS CHEVRON ON THE LEFT. KEEP LEFT ONTO US-97. PASS SHELL, TURN LEFT ONTO SPUR RD. TURN LEFT ONTO STRINGSTREET RD. TURN LEFT ONTO DOOLEY RD. ROAD NAME CHANGES TO RATTLESNAKE RD. TURN LEFT ONTO HAYSTACK BUTTE RD. ROAD NAME CHANGES TO RITZSCHKER RD. ARRIVE AT RITZSCHKER RD.

APPLICABLE CODES

BUILDING CODE 2014 OSSC
ELECTRICAL CODE 2017 OESC

DRAWING INDEX

SHEET NO.	DESCRIPTION	REV
T-1	TITLE SHEET	E
GN-1	GENERAL NOTES	E
GN-2	GENERAL NOTES	E
GN-3	GENERAL NOTES	E
C-1	SITE PLAN	E
C-2	CONCRETE DETAILS	E
C-3	GENERATOR SPECIFICATIONS	E
C-4	GENERATOR SPECIFICATIONS	E
C-5	GENERATOR SPECIFICATIONS	E
C-6	ATS SPECIFICATIONS	E
C-7	PROPANE TANK SPECIFICATIONS	E
C-8	PROPANE TANK SPECIFICATIONS	E
G-1	GROUNDING PLANS	E
G-2	GROUNDING DETAILS	E

SCOPE OF WORK

THE PROJECT CONSISTS OF THE INSTALLATION OF (1) NEW CONCRETE GENERATOR PAD, (1) NEW GENERATOR, (1) NEW CONCRETE PROPANE TANK PAD AND (1) NEW PROPANE TANK

T · ·Mobile·

AMERICAN TOWER®

POWDER RIVER
Development Services, LLC

REVISIONS

REV	DATE	DESCRIPTION	INT
E	04/04/19	ISSUED FOR REVIEW 90%	MAB
D	05/23/18	ISSUED FOR REVIEW 90%	RJP
C	03/07/18	ISSUED FOR REVIEW 90%	TRT
B	02/07/17	ISSUED FOR REVIEW 90%	JPN
A	09/06/17	ISSUED FOR REVIEW 90%	JHT

PRELIMINARY
NOT FOR
CONSTRUCTION

THESE PLANS AND SPECIFICATIONS, AS INSTRUMENTS OF SERVICE, ARE AND SHALL REMAIN THE PROPERTY OF POWDER RIVER DEVELOPMENT SERVICES, LLC WHETHER THE PROJECTS FOR WHICH THEY ARE MADE ARE EXECUTED OR NOT. THESE DRAWINGS AND SPECIFICATIONS SHALL NOT BE USED BY ANY PERSON OR ENTITY ON OTHER PROJECTS WITHOUT PRIOR WRITTEN CONSENT OF THE ENGINEER.

SITE INFORMATION

T-MOBILE #: PO02600A

ATC #: 310444

**184 RATTLESNAKE ROAD
CENTERVILLE, OREGON
98613**

SHEET TITLE:

TITLE SHEET

SHEET NUMBER:

T-1

THE INFORMATION CONTAINED IN THIS SET OF CONSTRUCTION DOCUMENTS IS PROPRIETARY BY NATURE. ANY USE OR DISCLOSURE OTHER THAN THAT WHICH RELATES TO CARRIER SERVICES IS STRICTLY PROHIBITED.

GENERAL NOTES

1. GENERAL NOTES AND TYPICAL DETAILS SHALL APPLY TO ALL PARTS OF THE JOB EXCEPT WHERE THEY MAY CONFLICT WITH DETAILS AND NOTES ON OTHER SHEETS. WHERE CONDITIONS ARE NOT SPECIFICALLY INDICATED BUT ARE OF SIMILAR CHARACTER TO DETAILS SHOWN, SIMILAR DETAILS OF CONSTRUCTION SHALL BE USED SUBJECT TO REVIEW BY THE ENGINEER.
2. WORK SHALL CONFORM TO THE REQUIREMENTS, AS AMENDED TO DATE, OF THE LATEST EDITION OF THE BUILDING CODE AND ALL OTHER LOCAL, STATE AND FEDERAL REGULATIONS.
3. OMISSIONS OR CONFLICTS BETWEEN THE VARIOUS ELEMENTS OF THE WORKING DRAWINGS AND/OR SPECIFICATIONS SHALL BE BROUGHT TO THE ATTENTION OF THE ENGINEER PRIOR TO PROCEEDING WITH ANY WORK INVOLVED.
4. ALL INFORMATION SHOWN ON THE DRAWINGS RELATIVE TO EXISTING CONDITIONS IS GIVEN AS THE BEST PRESENT KNOWLEDGE, BUT WITHOUT GUARANTEE OF ACCURACY. WHERE ACTUAL CONDITIONS CONFLICT WITH THE DRAWINGS, THEY SHALL BE REPORTED TO THE ENGINEER SO THAT THE PROPER REVISION MAY BE MADE. MODIFICATIONS OF CONSTRUCTION DETAILS SHALL NOT BE MADE WITHOUT THE WRITTEN APPROVAL OF THE ENGINEER.
5. THE CONSTRUCTION DRAWINGS AND SPECIFICATIONS REPRESENT THE FINISHED STRUCTURE AND DO NOT INDICATE THE METHOD OF CONSTRUCTION. THE CONTRACTOR SHALL SUPERVISE AND DIRECT THE WORK AND SHALL BE SOLELY RESPONSIBLE FOR CONSTRUCTION MEANS, METHODS, TECHNIQUES, SEQUENCES AND PROCEDURES, INCLUDING BUT NOT LIMITED TO BRACING, TEMPORARY SUPPORTS AND SHORING. OBSERVATION VISITS TO THE SITE BY FIELD REPRESENTATIVES OF THE ENGINEER SHALL NOT INCLUDE INSPECTIONS OF THE PROTECTIVE MEASURES OR THE CONSTRUCTION PROCEDURES. ANY SUPPORT SERVICES PERFORMED BY THE ENGINEER DURING THE CONSTRUCTION SHALL BE DISTINGUISHED FROM CONSTRUCTION AND DETAILED INSPECTION SERVICES WHICH ARE FURNISHED BY OTHERS. THESE SUPPORT SERVICES PERFORMED BY THE ENGINEER, WHETHER OF MATERIAL OR WORK, ARE FOR THE PURPOSE OF ASSISTING IN QUALITY CONTROL AND IN ACHIEVING CONFORMANCE WITH CONTRACT DOCUMENTS, BUT DO NOT GUARANTEE CONTRACTORS PERFORMANCE AND SHALL NOT BE CONSTRUED AS SUPERVISION OF CONSTRUCTION. CONTRACTOR SHALL TAKE NECESSARY PRECAUTIONS TO MAINTAIN AND ENSURE THE INTEGRITY OF THE STRUCTURE DURING CONSTRUCTION. NEITHER THE OWNER NOR ENGINEER WILL ENFORCE SAFETY MEASURES OR REGULATIONS. CONTRACTOR SHALL DESIGN, CONSTRUCT AND MAINTAIN ALL SAFETY DEVICES, INCLUDING SHORING AND BRACING, AND SHALL BE SOLELY RESPONSIBLE FOR CONFORMING TO ALL LOCAL, STATE AND FEDERAL SAFETY AND HEALTH STANDARDS, LAWS AND REGULATIONS.
6. SAFETY: CONFORM TO ALL APPLICABLE OSHA CONSTRUCTION SAFETY REGULATIONS FOR ALL WORK PERFORMED DURING CONSTRUCTION. JOB SITE SAFETY IS STRICTLY THE RESPONSIBILITY OF THE CONTRACTOR AND NOT THE ENGINEER OR OWNER.
7. ANY PROPRIETARY COMPONENTS, MOUNTS, MATERIALS, CHEMICAL, EPOXY AND WEDGE ANCHORS, AND SHOT PINS SHALL BE EXACTLY AS CALLED FOR IN THESE DRAWINGS. ANY DEVIATIONS SHALL BE APPROVED OR DISAPPROVED BY THE ENGINEER AT THE EXPENSE OF THE ENTITY REQUESTING THE SUBSTITUTION PRIOR TO THE INSTALLATION.
8. THE CONTRACTOR'S SCOPE OF WORK SHALL INCLUDE ALL ITEMS DEFINED IN THE CONTRACT DOCUMENTS. THE CONTRACT DOCUMENTS INCLUDE, BUT ARE NOT LIMITED TO, THE FOLLOWING: THE CONTRACT, SPECIFICATIONS AND CONSTRUCTION DRAWINGS.
9. THE CONTRACTOR SHALL BE ULTIMATELY RESPONSIBLE FOR COORDINATION AND ASSEMBLY OF ALL PARTS OF THE CONSTRUCTION DEPICTED HEREIN. THE CONTRACTOR SHALL PERFORM ANY CONSTRUCTABILITY REVIEW OR COORDINATION DRAWINGS NECESSARY TO IDENTIFY CONSTRUCTABILITY PROBLEMS PRIOR TO CONSTRUCTION.
10. THE CONTRACTOR SHALL VISIT THE JOB SITE TO REVIEW THE SCOPE OF WORK AND EXISTING JOB SITE CONDITIONS INCLUDING, BUT NOT LIMITED TO, MECHANICAL, ELECTRICAL SERVICE AND OVERALL COORDINATION. THE CONTRACTOR SHALL VERIFY ALL EXISTING CONDITIONS AND DIMENSIONS PRIOR TO SUBMITTING HIS BID. ANY DISCREPANCIES, CONFLICTS OR OMISSIONS, ETC., SHALL BE REPORTED TO THE CARRIER CONSTRUCTION SUPERVISOR BEFORE PROCEEDING WITH THE WORK.
11. THE CONTRACTOR SHALL PROTECT ALL AREAS FROM DAMAGE WHICH MAY OCCUR DURING CONSTRUCTION. ANY DAMAGE TO NEW AND EXISTING STRUCTURES, LANDSCAPING OR EQUIPMENT SHALL BE IMMEDIATELY REPAIRED OR REPLACED TO THE SATISFACTION OF THE TENANT, BUILDING OWNER OR OWNER'S REPRESENTATIVE AT THE EXPENSE OF THE CONTRACTOR.
12. IT SHALL BE THE RESPONSIBILITY OF THE CONTRACTOR TO LOCATE ALL EXISTING UTILITIES, WHETHER SHOWN HEREON OR NOT, AND TO PROTECT THEM FROM DAMAGE. THE CONTRACTOR SHALL BEAR ALL EXPENSES FOR REPAIR OR REPLACEMENT OF UTILITIES OR OTHER PROPERTY DAMAGED IN CONJUNCTION WITH THE EXECUTION OF WORK.
13. THE CONTRACTOR SHALL BE RESPONSIBLE FOR THE COMPLETE SECURITY OF THE SITE WHILE THE JOB IS IN PROGRESS AND UNTIL THE JOB IS COMPLETED.
14. THE CONTRACTOR SHALL PROVIDE TEMPORARY WATER, POWER AND TOILET FACILITIES AS REQUIRED BY THE GOVERNING AGENCY.
15. THE CONTRACTOR AND ALL SUBORDINATE CONTRACTORS SHALL COMPLY WITH ALL LOCAL AND STATE AND FEDERAL REGULATIONS.
16. THE CONTRACTOR SHALL OBTAIN AND PAY FOR PERMITS, LICENSES AND INSPECTIONS NECESSARY FOR PERFORMANCE OF THE WORK AND INCLUDE THOSE IN THE COST OF THE WORK TO CARRIER.
17. CHECK ACCURACY OF ALL DIMENSIONS IN THE FIELD. UNLESS SPECIFICALLY NOTED, DO NOT FABRICATE ANY MATERIALS OFF SITE, NOR PERFORM ANY CONSTRUCTION ACTIVITIES UNTIL THE ACCURACY OF DRAWING DIMENSIONS HAVE BEEN VERIFIED AGAINST ACTUAL FIELD DIMENSIONS. IN ALL CASES WHERE A CONFLICT MAY OCCUR, SUCH AS BETWEEN ITEMS COVERED IN SPECIFICATIONS AND NOTES ON THE DRAWINGS OR BETWEEN GENERAL NOTES AND SPECIFIC PLANS OR DETAILS, THE ENGINEER SHALL BE NOTIFIED, AND HE/SHE WILL INTERPRET THE INTENT OF THE CONTRACT DOCUMENTS PRIOR TO THE INSTALLATION OF THAT PORTION OF WORK.
18. THE CONTRACTOR SHALL NOTIFY THE CARRIER CONSTRUCTION SUPERVISOR OF ANY CONFLICTS OR DISCREPANCIES IN THE CONTRACT DOCUMENTS OR FIELD CONDITIONS PRIOR TO EXECUTING THE WORK IN QUESTION.
19. THE CONTRACTOR SHALL NOTIFY THE CARRIER CONSTRUCTION SUPERVISOR IF DETAILS ARE CONSIDERED UNSOUND, UNSAFE, NOT WATERPROOF, OR NOT WITHIN CUSTOMARY TRADE PRACTICE. IF WORK IS PERFORMED, IT WILL BE ASSUMED THAT THERE IS NO OBJECTION TO THE DETAIL. DETAILS ARE INTENDED TO SHOW THE END RESULT OF THE DESIGN. MINOR MODIFICATIONS MAY BE REQUIRED TO SUIT JOB CONDITIONS, AND SHALL BE INCLUDED AS PART OF THE WORK.
20. EXISTING ELEVATIONS AND LOCATIONS TO BE JOINED SHALL BE VERIFIED BY THE CONTRACTOR BEFORE CONSTRUCTION. IF THEY DIFFER FROM THOSE SHOWN ON THE PLANS, THE CONTRACTOR SHALL NOTIFY THE CARRIER CONSTRUCTION SUPERVISOR SO THAT MODIFICATIONS CAN BE MADE BEFORE PROCEEDING WITH THE WORK.
21. ALL SYMBOLS AND ABBREVIATIONS USED ON THE DRAWINGS ARE CONSIDERED CONSTRUCTION STANDARDS. IF THE CONTRACTOR HAS QUESTIONS REGARDING THEIR EXACT MEANING, THE ENGINEER SHALL BE CONTACTED FOR CLARIFICATION BEFORE PROCEEDING WITH THE WORK.
22. THE CONTRACTOR SHALL PROVIDE ALL NECESSARY BLOCKING, BACKING, FRAMING, HANGERS OR OTHER SUPPORT NOT OTHERWISE SHOWN HEREIN. ALL SUSPENDED MECHANICAL EQUIPMENT TO BE SWAY OR LATERALLY BRACED.
23. GOVERNING AGENCY–APPROVED PLANS SHALL BE KEPT IN A PLAN BOX AND SHALL NOT BE USED BY WORKMEN. ALL CONSTRUCTION SETS SHALL REFLECT SAME INFORMATION. AT ALL TIMES THESE ARE TO BE UNDER THE CARE OF THE JOB SUPERINTENDENT.
24. DESIGN DRAWINGS ARE DIAGRAMMATIC ONLY AND SHALL BE FOLLOWED AS CLOSELY AS ACTUAL CONSTRUCTION CONDITIONS WILL PERMIT. ANY ERROR, OMISSION, OR DESIGN DISCREPANCY SHALL BE BROUGHT TO THE ATTENTION OF THE CARRIER CONSTRUCTION SUPERVISOR FOR CLARIFICATION OR CORRECTION BEFORE CONSTRUCTION.
25. AS–BUILT REQUIREMENTS: DO NOT USE RECORD DOCUMENTS FOR CONSTRUCTION PURPOSES. PROTECT RECORD DOCUMENTS FROM DETERIORATION AND LOSS IN A SECURE, FIRE–RESISTANT LOCATION. PROVIDE ACCESS TO RECORD DOCUMENTS FOR THE CARRIER CONSTRUCTION SUPERVISOR'S REFERENCE DURING NORMAL WORKING HOURS. MAINTAIN A CLEAN, UNDAMAGED SET OF BLUE OR BLACK LINE PRINTS OF CONTRACT DRAWINGS AND SHOP DRAWINGS. MARK THE SET TO SHOW THE ACTUAL INSTALLATION WHERE THE INSTALLATION VARIES SUBSTANTIALLY FROM THE WORK AS ORIGINALLY SHOWN. MARK WHICH DRAWINGS ARE MOST CAPABLE OF SHOWING CONDITIONS FULLY AND ACCURATELY. WHERE SHOP DRAWINGS ARE USED, RECORD A CROSS–REFERENCE AT THE CORRESPONDING LOCATION ON THE CONTRACT DRAWINGS. GIVE ATTENTION TO CONCEALED ELEMENTS THAT WOULD BE DIFFICULT TO MEASURE AND RECORD AT A LATER DATE. MARK RECORD SETS WITH RED ERASABLE PENCIL. USE OTHER COLORS TO DISTINGUISH BETWEEN VARIATIONS IN SEPARATE CATEGORIES OF THE WORK. MARK NEW INFORMATION THAT IS IMPORTANT TO THE OWNER BUT WAS NOT SHOWN ON THE CONTRACT DRAWINGS, DETAILS OR SHOP DRAWINGS. NOTE RELATED CHANGE ORDER NUMBERS WHERE APPLICABLE. NOTE RELATED RECORD DRAWING INFORMATION AND PRODUCT DATA. UPON COMPLETION OF THE WORK, SUBMIT ONE (1) COMPLETE SET OF RECORD DOCUMENTS TO THE CARRIER CONSTRUCTION SUPERVISOR FOR THE OWNER'S RECORDS.
26. A CLOSEOUT BOOK CONTAINING THE FOLLOWING, SHALL BE PROVIDED BY THE CONTRACTOR, AS APPLICABLE:
    - A. AS BUILT DESIGN DRAWINGS
    - B. SWEEP TEST RESULTS
    - C. RESISTIVELY TEST
    - D. PHOTO DOCUMENTATION OF:
        - I. UNDERGROUND CONDUITS AND GROUND RING
        - II. ANTENNA, COAX, JUMPER ATTACHMENTS AND GROUND KIT ATTACHMENTS
        - III. ANTENNA DOWN TILT MEASUREMENT USING AN INCLINOMETER ON THE BACK PLANE OF THE ANTENNA
        - IV. GROUND BAR ATTACHMENTS
    - E. SIGNED OFF PERMIT CARDS
    - F. CERTIFICATE OF OCCUPANCY
    - G. RETURN OF KEYS AND/OR ACCESS AUTHORIZATION
    - H. ORIGINAL BUILDING PERMIT

SITE WORK NOTES

1. SCOPE: CLEARING, GRUBBING, STRIPPING, EROSION CONTROL, SURVEY, LAYOUT, SUB GRADE PREPARATION, FINISH GRADING AND SECURITY FENCE, AS REQUIRED BY CONSTRUCTION DRAWINGS AND DETAIL DRAWINGS.
2. REFERENCES:
    - A. DEPARTMENT OF TRANSPORTATION CONSTRUCTION AND MATERIAL SPECIFICATIONS FOR THE STATE IN WHICH THE PROJECT IS LOCATED.
    - B. ASTM (AMERICAN SOCIETY FOR TESTING AND MATERIALS)
    - C. OSHA (OCCUPATIONAL SAFETY AND HEALTH ADMINISTRATION)
    - D. AASHTO (AMERICAN ASSOCIATION OF STATE TRANSPORTATION OFFICIALS)
3. INSPECTION AND TESTING:
    - A. FIELD TESTING OF EARTHWORK, AGGREGATE BASE COURSE, COMPACTION AND CONCRETE TESTING SHALL BE PERFORMED BY THE CONTRACTOR'S INDEPENDENT TESTING LAB.
    - B. ALL WORK SHALL BE INSPECTED AND RELEASED BY THE CARRIER CONSTRUCTION SUPERVISOR WHO SHALL CARRY OUT THE GENERAL INSPECTION OF THE WORK WITH SPECIFIC CONCERN TO PROPER PERFORMANCE OF THE WORK AS SPECIFIED AND/OR CALLED FOR ON THE DRAWINGS. IT IS THE CONTRACTOR'S RESPONSIBILITY TO REQUEST TIMELY INSPECTIONS PRIOR TO PROCEEDING WITH FURTHER WORK THAT WOULD MAKE PARTS OF THE WORK INACCESSIBLE OR DIFFICULT TO INSPECT.
4. SITE MAINTENANCE AND PROTECTION:
    - A. PROVIDE ALL NECESSARY JOB SITE MAINTENANCE FROM COMMENCEMENT OF THE WORK UNTIL COMPLETION OF THE CONTRACT.
    - B. CONTACT THE ONE–CALL UTILITY LOCATION SERVICE PRIOR TO ANY EXCAVATING ACTIVITIES TO HAVE LOCATIONS OF UNDERGROUND UTILITIES VERIFIED.
    - C. AVOID DAMAGE TO THE SITE INCLUDING EXISTING FACILITIES, STRUCTURES, TREES AND SHRUBS DESIGNATED TO REMAIN. TAKE PROTECTIVE MEASURES TO PREVENT EXISTING ITEMS THAT ARE NOT DESIGNATED FOR REMOVAL FROM BEING DAMAGED BY THE WORK.
    - D. KEEP SITE FREE OF ALL PONDING WATER.
    - E. CONTRACTOR SHALL PROVIDE ALL EROSION AND SEDIMENTATION CONTROL MEASURES AS REQUIRED BY LOCAL, CITY, COUNTY AND STATE CODES AND ORDINANCES TO PROTECT EMBANKMENTS FROM SOIL LOSS AND TO PREVENT ACCUMULATION OF SOIL AND SILT IN STREAMS AND DRAINAGE PATHS LEAVING THE CONSTRUCTION AREA. THIS MAY INCLUDE SUCH MEASURES AS SILT FENCES, STRAW BALE SEDIMENT BARRIERS AND CHECK DAMS.
    - F. PROVIDE AND MAINTAIN ALL TEMPORARY FENCING, BARRICADES, WARNING SIGNALS AND SIMILAR DEVICES NECESSARY TO PROTECT LIFE AND PROPERTY DURING THE ENTIRE PERIOD OF CONSTRUCTION. REMOVE ALL SUCH DEVICES UPON COMPLETION OF THE WORK.
5. BEFORE STARTING GENERAL SITE PREPARATION ACTIVITIES, INSTALL EROSION AND SEDIMENT CONTROL MEASURES. THE WORK AREA SHALL BE CONSTRUCTED AND MAINTAINED IN SUCH CONDITION THAT IN THE EVENT OF RAIN THE SITE WILL BE WELL DRAINED AT ALL TIMES.
6. ENSURE POSITIVE DRAINAGE DURING AND AFTER COMPLETION OF CONSTRUCTION.
7. PERFORM ALL SURVEY, LAYOUT, STAKING AND MARKING TO ESTABLISH AND MAINTAIN ALL LINES, GRADES, ELEVATIONS AND BENCHMARKS NEEDED FOR EXECUTION OF THE WORK.
8. CLEAR AND GRUB THE AREA WITHIN THE LIMITS OF THE SITE AND ONLY THE IMMEDIATE SURROUNDINGS NECESSARY TO COMPLETE THE WORK. REMOVE TREES, BRUSH, STUMPS, RUBBISH AND OTHER DEBRIS AND VEGETATION RESTING ON OR PROTRUDING THROUGH THE SURFACE OF THE SITE AREA TO BE CLEARED AND GRUBBED.
9. REMOVE FROM THE SITE AND DISPOSE IN AN AUTHORIZED LANDFILL ALL DEBRIS RESULTING FROM CLEARING AND GRUBBING OPERATIONS. BURNING IS NOT PERMITTED.
10. PRIOR TO EXCAVATING, THOROUGHLY EXAMINE THE AREA TO BE EXCAVATED AND/OR TRENCHED TO VERIFY THE LOCATIONS OF FEATURES INDICATED ON THE DRAWINGS, AND ASCERTAIN THE EXISTENCE AND LOCATION OF ANY STRUCTURE, UNDERGROUND STRUCTURE, CULVERT, STREAM CROSSING OR OTHER ITEM NOT SHOWN THAT MIGHT AFFECT OR INTERFERE WITH THE NEW CONSTRUCTION. NOTIFY THE CARRIER CONSTRUCTION SUPERVISOR OF ANY OBSTRUCTIONS THAT WILL PREVENT ACCOMPLISHMENT OF THE WORK AS INDICATED ON THE DRAWINGS.
11. SEPARATE AND STOCKPILE ALL EXCAVATED MATERIALS SUITABLE FOR BACK FILL. ALL EXCESS EXCAVATED, AND UNSUITABLE MATERIALS SHALL BE DISPOSED OF IN AN AREA DESIGNATED BY THE CARRIER CONSTRUCTION SUPERVISOR. (UNSUITABLE MATERIAL MAY BE REQUIRED TO BE REMOVED FROM THE SITE.)

T-Mobile

AMERICAN TOWER®

POWDER RIVER
Development Services, LLC

REVISIONS

REV	DATE	DESCRIPTION	INT
E	04/04/19	ISSUED FOR REVIEW 90%	MAB
D	05/23/18	ISSUED FOR REVIEW 90%	RJP
C	03/07/18	ISSUED FOR REVIEW 90%	TRT
B	02/07/17	ISSUED FOR REVIEW 90%	JPN
A	09/06/17	ISSUED FOR REVIEW 90%	JHT

PRELIMINARY
NOT FOR
CONSTRUCTION

THESE PLANS AND SPECIFICATIONS, AS INSTRUMENTS OF SERVICE, ARE AND SHALL REMAIN THE PROPERTY OF POWDER RIVER DEVELOPMENT SERVICES, LLC WHETHER THE PROJECTS FOR WHICH THEY ARE MADE ARE EXECUTED OR NOT. THESE DRAWINGS AND SPECIFICATIONS SHALL NOT BE USED BY ANY PERSON OR ENTITY ON OTHER PROJECTS WITHOUT PRIOR WRITTEN CONSENT OF THE ENGINEER.

SITE INFORMATION

T-MOBILE #: PO02600A

ATC #: 310444

184 RATTLESNAKE ROAD
CENTERVILLE, OREGON
98613

SHEET TITLE:

GENERAL NOTES

SHEET NUMBER:

GN-1

THE INFORMATION CONTAINED IN THIS SET OF CONSTRUCTION DOCUMENTS IS PROPRIETARY BY NATURE. ANY USE OR DISCLOSURE OTHER THAN THAT WHICH RELATES TO CARRIER SERVICES IS STRICTLY PROHIBITED.

ELECTRICAL NOTES

1. THESE NOTES DESCRIBE THE MINIMUM REQUIREMENT FOR INSTALLATION OF ALL ELECTRICAL SYSTEMS. SUBMITTAL OF BID INDICATES THAT THE CONTRACTOR IS COGNIZANT OF ALL JOB SITE CONDITIONS AND WORK TO BE PERFORMED UNDER THIS CONTRACT.
2. THE PUBLICATIONS LISTED BELOW FORM PART OF THESE NOTES. EACH PUBLICATION SHALL BE THE LATEST REVISION AND ADDENDUM IN EFFECT ON THE DATE THIS SPECIFICATION IS ISSUED FOR CONSTRUCTION, UNLESS NOTED OTHERWISE. EXCEPT AS MODIFIED BY THE REQUIREMENTS SPECIFIED HEREIN, OR THE DETAILS OF THE DRAWINGS, WORK INCLUDED IN THIS SPECIFICATION SHALL CONFORM TO THE APPLICABLE PROVISIONS OF THESE PUBLICATIONS:
   - A. ANSI (AMERICAN NATIONAL STANDARDS INSTITUTE)
   - B. IEEE (INSTITUTE OF ELECTRICAL AND ELECTRONICS ENGINEERS)
   - C. NEC (NATIONAL ELECTRICAL CODE), LATEST EDITION
   - D. NEMA (NATIONAL ELECTRICAL MANUFACTURERS ASSOCIATION)
   - E. NFPA 70 (NATIONAL FIRE PROTECTION ASSOCIATION)
   - F. OSHA (OCCUPATIONAL SAFETY AND HEALTH ADMINISTRATION), INCLUDING ALL APPLICABLE AMENDMENTS
   - G. UL (UNDERWRITERS LABORATORIES)
   - H. APPLICABLE LOCAL CODES AND ORDINANCES
3. THE CONTRACTOR SHALL INSTALL UNDERGROUND ELECTRICAL AND TELEPHONE CONDUITS AND CABLE AS SPECIFIED HEREIN AND AS SHOWN ON THE DRAWINGS.
4. WHEN FINISHED, WORK SHALL BE IN A COMPLETE AND UNDAMAGED STATE, AS REQUIRED IN THE CONTRACT DOCUMENTS.
5. ITEMS SHALL BE NEW AND SHALL BE INSTALLED ONLY IF IN FIRST-CLASS CONDITION.
6. SUBSTITUTIONS FOR MATERIAL WILL BE PERMITTED ONLY BY WRITTEN APPROVAL OF THE CARRIER CONSTRUCTION SUPERVISOR AND BY THE ENGINEER.
7. THE CONTRACTOR SHALL PROVIDE ALL MATERIAL EXCEPT AS SPECIFIED IN THE CONTRACT DOCUMENTS. ALL MATERIAL SHALL BE APPROVED AND LISTED BY OR BEAR THE UL LABEL, AND WILL COMPLY WITH ANSI, IEEE AND NEMA STANDARDS WHERE APPLICABLE.
8. CONDUITS:
   - A. ALL UNDERGROUND CONDUIT SHALL BE SCHEDULE 40 PVC , SIZED AS SHOWN ON THE CONSTRUCTION DRAWINGS.
   - B. ALL EXTERIOR ABOVEGROUND CONDUIT SHALL BE PER LOCAL CODE REQUIREMENTS.
   - C. ALL INTERIOR CONDUIT SHALL BE EMT WITH COMPRESSION-TYPE FITTINGS.
   - D. LIQUID-TIGHT FLEXIBLE METALLIC CONDUIT SHALL BE USED FOR OUTDOOR LOCATIONS WHERE FLEXIBLE CONNECTION IS REQUIRED.
9. CABLES CONDUCTORS FOR GENERAL WIRING SHALL BE NEC STANDARD ANNEALED COPPER WIRE WITH NEC 600-VOLT INSULATION.
   - A. #8 AND LARGER-STRANDED TYPE, THHN OR THWN.
   - B. #10 AND SMALLER-SOLID TYPE THHN OR THWN.
   - C. CONDUCTORS IN CONDUIT IN OR ADJACENT TO HIGH HEAT SOURCE SHALL BE TYPE XHHW.
   - D. CONDUCTORS IN CONDUITS ABOVE ROOF, ON TOP OF ROOF OR INSIDE BUILT-UP ROOFING MATERIAL SHALL BE TYPE XHHW
10. CONVENIENCE OUTLET, UNLESS NOTED OTHERWISE, SURFACE-MOUNTED OUTLETS FOR EXTERIOR LOCATIONS SHALL BE FERALOY, CAD/ZINC ELECTROPLATED WITH THREADED HUBS OR CONDUIT ENTRANCES DRILLED AND TAPPED. ALL COVERS SHALL BE SELF-CLOSING AND GASKETED. SURFACE MOUNTED OUTLETS FOR INTERIOR LOCATIONS SHALL BE GALVANIZED, PRESSED STEEL WITH COVER PLATE, SIERRA PLASTIC STYLE, IVORY COLOR.
11. COAXIAL CABLE SUPPORTS 1. ALL WAVE GUIDE SUPPORTS SHALL BE MANUFACTURED TO MEET ALL COAX MINIMUM BENDING REQUIREMENTS. SUPPORTS SHALL BE PROVIDED EVERY 3'-0" ON CENTER.
12. BEFORE LAYING OUT WORK, EXERCISE PROPER PRECAUTION TO VERIFY EACH MEASUREMENT.
13. USE EXTREME CAUTION BEFORE EXCAVATING IN EXISTING AREAS TO LOCATE EXISTING UNDERGROUND SERVICES.
14. A VISUAL CHECK OF ELECTRICAL AND TELEPHONE CABLES, CONDUITS AND OTHER ITEMS SHALL BE MADE BY A CARRIER CONSTRUCTION SUPERVISOR BEFORE THESE ITEMS ARE PERMANENTLY INSTALLED.
15. THE CONTRACTOR SHALL NOTIFY THE CARRIER CONSTRUCTION SUPERVISOR 24 HOURS PRIOR TO TRENCH BACK FILL.
16. TRENCHING, BACK FILLING, BEDDING AND COMPACTING SHALL COMPLY WITH SITE WORK SPECIFICATIONS.
17. DIG TRENCHES TO THE REQUIRED DEPTH AS SHOWN ON THE DRAWINGS WITHOUT POCKETS OR DIPS. REMOVE LARGE STONES FROM THE BOTTOM OF THE TRENCH AND FIRMLY TAMP LOOSE FILL IN THE BOTTOM BEFORE CONDUIT IS LAID.
18. INSTALL UNDERGROUND CONDUIT WITH A MINIMUM 3-INCH TO 100-FOOT SLOPE OR TO A SLOPE SHOWN ON THE DRAWINGS.
19. UNLESS SHOWN OTHERWISE ON THE DRAWINGS, TERMINATE AND CAP ALL STUB-UPS 12 INCHES ABOVE FINISHED GRADE ELEVATION.
20. WHEREVER CONDUITS CROSS UNDER ROADWAYS, USE GALVANIZED RIGID STEEL CONDUITS IN ALL CASES, EXTENDING 5 FEET BEYOND THE EDGE OF THE ROAD BED. MINIMUM DEPTH FOR CONDUIT SHALL BE 4 FEET BELOW ROADWAY GRADE.
21. MARK UNDERGROUND CONDUITS WITH A 6-INCH WIDE RED POLYETHYLENE TAPE BURIED 6 INCHES UNDER THE SURFACE DIRECTLY OVER THE CONDUITS. MARK THE TAPE THUS: CAUTION-BURIED ELECTRICAL CABLE.
22. FOR SEALING CONDUITS, USE ONLY NON-THERMOPLASTIC COMPOUNDS SUCH AS J.M. DUXSEAL, OR AN CARRIER-APPROVED SUBSTITUTE. THE COMPOUND SHALL HAVE NO EFFECT ON RUBBER OR RUBBER-LIKE INSULATIONS, LEAD, ALUMINUM OR FERROUS ALLOYS; IT SHALL BE INSOLUBLE IN WATER AND WITHSTAND MAXIMUM TEMPERATURE RANGES OF THE LOCALITY.
23. COAXIAL – REFER TO ANTENNA AND COAXIAL CABLE INSULATION PROCEDURES.
24. ANTENNA – REFER TO ANTENNA AND COAXIAL CABLE INSULATION PROCEDURES.
25. LNA/MHA – REFER TO ANTENNA AND COAXIAL CABLE INSULATION PROCEDURES.

GROUNDING NOTES

1. THIS SPECIFICATION PRESCRIBES THE REQUIREMENTS FOR FURNISHING, INSTALLATION AND TESTING OF THE GROUNDING CABLE, CONNECTORS AND ASSOCIATED COMPONENTS AS INDICATED ON THE DRAWINGS.
2. APPLICATIONS OF ELECTRICAL GROUNDING AND BONDING WORK SPECIFIED IN THIS SPECIFICATION INCLUDE THE FOLLOWING:
   - A. FENCE AND GATE POSTS
   - B. ELECTRICAL POWER SYSTEMS
   - C. GROUNDING ELECTRODES
   - D. GROUND BUS BAR
   - E. SERVICE EQUIPMENT
   - F. ENCLOSURES
   - G. MONOPOLE / LATTICE TOWER
   - H. ICE BRIDGE
3. REFERENCES: THE PUBLICATIONS LISTED BELOW FORM PART OF THESE DRAWINGS. EACH PUBLICATION SHALL BE THE LATEST REVISION AND ADDENDUM IN EFFECT ON THE DATE THESE DRAWINGS ARE ISSUED FOR CONSTRUCTION, UNLESS NOTED OTHERWISE. EXCEPT AS MODIFIED BY THE REQUIREMENTS SPECIFIED HEREIN, OR THE DETAILS OF THE DRAWINGS, WORK INCLUDED IN THESE DRAWINGS SHALL CONFORM TO THE APPLICABLE PROVISIONS OF THESE PUBLICATIONS.
   - A. ANSI (AMERICAN NATIONAL STANDARDS INSTITUTE)
   - B. IEEE (INSTITUTE OF ELECTRICAL AND ELECTRONICS ENGINEERS)
   - C. NEC (NATIONAL ELECTRICAL CODE), LATEST EDITION
   - D. NEMA (NATIONAL ELECTRICAL MANUFACTURERS ASSOCIATION)
   - E. NESC (NATIONAL ELECTRICAL SAFETY CODE), LATEST EDITION
   - F. OSHA (OCCUPATIONAL SAFETY AND HEALTH ADMINISTRATION)
   - G. UL (UNDERWRITERS' LABORATORIES)
   - H. APPLICABLE LOCAL CODES AND ORDINANCES
4. MATERIALS: EXCEPT AS OTHERWISE INDICATED, PROVIDE ELECTRICAL GROUNDING AND BONDING SYSTEMS INDICATED; WITH ASSEMBLY OF MATERIAL, INCLUDING, BUT NOT LIMITED TO, GROUNDING ELECTRODES, BONDING JUMPER AND ADDITIONAL ACCESSORIES NEEDED FOR A COMPLETE INSTALLATION. WHERE MORE THAN ONE TYPE OF COMPONENT PRODUCT MEETS INDICATED REQUIREMENTS, SELECTION IS INSTALLER'S OPTION. WHERE MATERIALS OR COMPONENTS ARE NOT INDICATED, PROVIDE PRODUCTS WHICH COMPLY WITH NEC, UL, AND IEEE REQUIREMENTS AND WITH ESTABLISHED INDUSTRY STANDARDS FOR THOSE APPLICATIONS INDICATED.
   - A. GROUNDING:
     - I. THE EQUIPMENT SHALL BE GROUNDED AS FOLLOWS, AS SHOWN ON THE DRAWINGS AND IN COMPLIANCE WITH NEC ARTICLE 250 AND STATE AND LOCAL CODES.
     - II. GROUND RODS AND QUANTITY SHOWN ON THE DRAWINGS ARE DIAGRAMMATIC. THE CONTRACTOR SHALL PERFORM A GROUND-RESISTANCE-TO-EARTH TEST. SHOULD THE INSTALLATION HAVE A RESISTANCE OF 5 OHMS OR MORE, CONTRACTOR SHALL INSTALL MORE GROUND RODS AS NECESSARY SO THAT THE OVERALL GROUND-TO-EARTH RESISTANCE IS LESS THAN 5 OHMS.
     - III. INSTALL ELECTRICAL GROUNDING AND BONDING SYSTEMS AS INDICATED, IN ACCORDANCE WITH MANUFACTURER'S INSTRUCTIONS, NEC'S "STANDARD OF INSTALLATION," AND IN ACCORDANCE WITH RECOGNIZED INDUSTRY PRACTICES TO ENSURE THAT PRODUCTS COMPLY WITH REQUIREMENTS.
     - IV. COORDINATE WITH OTHER ELECTRICAL WORK AS NECESSARY TO INTERFACE INSTALLATION OF ELECTRICAL GROUNDING AND BONDING SYSTEMS.
     - V. INSTALL GROUND CONDUCTORS A MINIMUM OF 36 INCHES BELOW FINISHED GRADE WHICH ENCIRCLE THE TOWER AND EQUIPMENT, AND ARE CONNECTED TO EACH DRIVEN GROUND ROD. GROUND TRENCH SHALL BE AT LEAST 24 INCHES AWAY FROM FOUNDATIONS.
     - VI. TIGHTEN GROUNDING AND BONDING CONNECTORS, INCLUDING SCREWS AND BOLTS, IN ACCORDANCE WITH MANUFACTURER'S PUBLISHED TORQUE TIGHTENING VALUE FOR CONNECTORS AND BOLTS. WHERE MANUFACTURER'S TORQUING REQUIREMENTS ARE NOT INDICATED, TIGHTEN CONNECTIONS TO COMPLY WITH TIGHTENING TORQUE VALUE SPECIFIED IN UL 486A TO ASSURE PERMANENT AND EFFECTIVE GROUNDING.
     - VII. APPLY CORROSION-RESISTANT FINISH (NO-OX OR CARRIER-APPROVED EQUIVALENT) TO FIELD-CONNECTIONS, AT COPPER GROUND BARS AND PLACES WHERE FACTORY APPLIED PROTECTIVE COATING HAVE BEEN DESTROYED, OR ARE SUBJECTED TO CORROSIVE AND/OR OXIDATION PROCESS.
     - VIII. ON EXISTING LATTICE TOWERS, WATER TOWERS AND ROOF TOPS, WHEN A NEW GROUNDING SYSTEM IS INSTALLED, THE CONTRACTOR SHALL TIE THE NEW GROUND SYSTEM TO THE EXISTING WATER TOWER, LATTICE TOWER STRUCTURAL STEEL OR BUILDING STRUCTURAL STEEL AS THE CASE MAY BE AT A MINIMUM OF ONE LOCATION SO THAT THEY ARE AT THE SAME VOLTAGE POTENTIAL.
     - IX. ALL TOWER AND TOP GROUND WIRES SHALL BE SUPPORTED EVERY TWO FEET MAXIMUM.
   - B. GROUND RODS:
     - I. GROUND RODS SHALL BE 5/8" DIAMETER WITH 8'-0" EMBEDMENT MIN., COPPER CLAD DRIVEN ROD(S).
     - II. GROUND ROD(S) SHALL BE LOCATED AT THE PERIMETER OF EQUIPMENT AS TO CREATE A GROUND RING AS SHOWN ON THE DRAWINGS.
     - III. GROUND ROD(S) SHALL BE SPACED AT A MINIMUM OF 8'-0" AND A MAXIMUM SPACING OF 10'-0" ON CENTER.
     - IV. GROUND RODS SHALL BE BURIED BELOW THE FROSTLINE. AT NO TIME SHALL THIS DEPTH BE LESS THAN 18" BELOW FINISHED GRADE.
     - V. GROUND RODS WHICH CANNOT BE DRIVEN STRAIGHT DOWN THE ENTIRE 10'-0", SHALL BE DRIVEN AT AN ANGLE NOT GREATER THAN 45 DEGREES (NEC 250-83 AND 250-84).
     - VI. GROUND ROD LOCATIONS SHALL BE NOTED ON THE AS-BUILT DRAWING COMPLETE WITH DIMENSIONS.
     - VII. PROVIDE GROUND TEST WELLS SHOWN ON THE CONSTRUCTION DRAWINGS.
   - C. GROUND CONDUCTOR:
     - I. ALL DIRECT BURIED GROUND CONDUCTORS SHALL BE TINNED SOLID (#2 AWG) WIRE. BURIED GROUND CONDUCTOR SHALL BE INSTALLED AT MINIMUM DEPTH OF 36" BELOW GRADE.
     - II. ALL SUB GRADE GROUND CONNECTIONS SHALL BE MADE USING EXOTHERMIC WELD PROCESS. CONNECTIONS SHALL INCLUDE ALL CABLE TO CABLE SPLICES, TEES AND ALL GROUND ROD CONNECTIONS. MOLD, WELD KITS, ETC., SHALL BE MANUFACTURED BY CADWELD AND SHALL BE I INSTALLED AS PER THE MANUFACTURER'S INSTRUCTIONS.
     - III. GROUND CONDUCTORS SHALL BE ROUTED IN THE SHORTEST AND C STRAIGHTEST DISTANCES POSSIBLE TO MINIMIZE TRANSIENT VOLTAGE RISES. CONDUCTORS SHALL BE INSTALLED AS FOLLOWS:
     - IV. ALL GROUND CONDUCTORS SHALL FOLLOW A CONTINUOUS DOWNWARD PATTERN TO THE GROUND SOURCE. (NEVER RUN GROUND CONDUCTOR IN AN UPWARD DIRECTION.)
     - V. CONDUCTORS SHALL BE INSTALLED WITH A MINIMUM OF 12-INCH MINIMUM BENDING RADIUS.
     - VI. WHEN THE MINIMUM BENDING RADIUS CANNOT BE ACHIEVED, GROUND CABLES SHALL BE ROUTED AT 90-DEGREE BENDS WITH THE USE OF EXOTHERMIC CONNECTIONS AT 90 DEGREES, WITH THE INTENT IS TO ELIMINATE THE CABLE BEND RADIUS AND REPLACE THE RADIUS WITH AN EXOTHERMIC CONNECTION.
5. PREPARATION:
   - A. ALL SURFACES TO WHICH GROUND CONNECTIONS WILL BE MADE SHALL BE FREE OF PAINT, GALVANIZING DIRECT CORROSION, ETC.
   - B. ALL METAL SURFACES EXPOSED ON GROUNDING SHALL BE EITHER COLD GALVANIZE, OR PAINTED TO MATCH ORIGINAL SURFACE.
6. EXAMINE AREAS AND CONDITIONS UNDER WHICH ELECTRICAL GROUNDING AND BONDING CONNECTIONS ARE TO BE MADE AND NOTIFY CARRIER CONSTRUCTION SUPERVISOR AND ENGINEER OF RECORD IN WRITING OF CONDITIONS DETRIMENTAL TO PROPER COMPLETION OF WORK. DO NOT PROCEED WITH WORK UNTIL UNSATISFACTORY CONDITIONS HAVE BEEN CORRECTED. THE CONTRACTOR SHALL NOTIFY THE CARRIER CONSTRUCTION SUPERVISOR A MINIMUM OF 24 HOURS PRIOR TO TRENCH BACK FILL. ALL WORK DONE BELOW FINISHED GRADE SHALL BE INSPECTED BY THE CONSTRUCTION SUPERVISOR DURING THAT PERIOD.
7. GROUND TESTING:
   - A. THE CONTRACTOR SHALL TEST THE GROUND ELECTRODE ROD RESISTANCE IN ACCORDANCE WITH THE METHODS OF MEASUREMENT DEFINED IN THE FALL OF POTENTIAL METHOD.
   - B. TEST INSTRUMENTS SHALL OPERATE AT A FREQUENCY OTHER THAN 60 HERTZ AND SHALL CONTAIN STRAY CURRENT AND DC FILTERS, FAULT CURRENT PROTECTION AND HAVE SENSITIVITY TO OPERATE A LOW SIGNAL STRENGTH.
   - C. PRIOR TO TESTING, THE CONTRACTOR SHALL DE-ENERGIZE ALL POWER SOURCES, DISCONNECT THE ELECTRODE CONDUCTOR FROM THE GROUND ROD, WEAR HIGH VOLTAGE RUBBER SAFETY GLOVES.
   - D. GROUND TESTS ARE TO BE PERFORMED BY QUALIFIED PERSONS FAMILIAR WITH THE CONSTRUCTION AND OPERATION OF THE EQUIPMENT AND THE HAZARDS INVOLVED.
   - E. AN INDEPENDENT, APPROVED OUTSIDE FIRM SHALL PERFORM THE GROUND TEST AS OUTLINED. ALL TEST RESULTS SHALL BE FORWARDED TO THE CARRIER CONSTRUCTION SUPERVISOR FOR APPROVAL.

T-Mobile

AMERICAN TOWER®

POWDER RIVER
Development Services, LLC

REVISIONS

REV	DATE	DESCRIPTION	INT
E	04/04/19	ISSUED FOR REVIEW 90%	MAB
D	05/23/18	ISSUED FOR REVIEW 90%	RJP
C	03/07/18	ISSUED FOR REVIEW 90%	TRT
B	02/07/17	ISSUED FOR REVIEW 90%	JPN
A	09/06/17	ISSUED FOR REVIEW 90%	JHT

PRELIMINARY
NOT FOR
CONSTRUCTION

THESE PLANS AND SPECIFICATIONS, AS INSTRUMENTS OF SERVICE, ARE AND SHALL REMAIN THE PROPERTY OF POWDER RIVER DEVELOPMENT SERVICES, LLC WHETHER THE PROJECTS FOR WHICH THEY ARE MADE ARE EXECUTED OR NOT. THESE DRAWINGS AND SPECIFICATIONS SHALL NOT BE USED BY ANY PERSON OR ENTITY ON OTHER PROJECTS WITHOUT PRIOR WRITTEN CONSENT OF THE ENGINEER.

SITE INFORMATION

T-MOBILE #: PO02600A

ATC #: 310444

184 RATTLESNAKE ROAD
CENTERVILLE, OREGON
98613

SHEET TITLE:

GENERAL NOTES

SHEET NUMBER:

GN-2

THE INFORMATION CONTAINED IN THIS SET OF CONSTRUCTION DOCUMENTS IS PROPRIETARY BY NATURE. ANY USE OR DISCLOSURE OTHER THAN THAT WHICH RELATES TO CARRIER SERVICES IS STRICTLY PROHIBITED.

CONCRETE NOTES

1. THE MINIMUM ULTIMATE COMPRESSIVE STRENGTH OF CONCRETE AT 28 DAYS SHALL BE AS FOLLOWS:

   F'C = 4,000 PSI – FOOTINGS, GRADE BEAMS & ALL OTHER CONCRETE, U.N.O.

   F'C = 4,000 PSI – RETAINING WALLS & PILASTERS

   F'C = 4,000 PSI – SLAB ON GRADE

2. ALL CONCRETE UNLESS NOTED OTHERWISE SHALL BE NORMAL WEIGHT TYPE (150 PCF). AGGREGATES SHALL CONFORM TO ASTM C–33 WITH PROVEN SHRINKAGE CHARACTERISTICS OF LESS THAN .05% (MAXIMUM SIZE).
3. CEMENT SHALL CONFORM TO ASTM C–150 (TYPE V) UNLESS NOTED OTHERWISE ON THE DRAWINGS.
4. CONCRETE MIX DESIGN FOR DESIGN COMPRESSIVE STRENGTH GREATER THAN 2500 P.S.I. SHALL BE PREPARED BY AN APPROVED TESTING LABORATORY AND SHALL BE STAMPED AND SIGNED BY A LICENSED ENGINEER, IN THE STATE OF JURISDICTION. THE MIX DESIGN SHALL THEN BE SUBMITTED TO THE ENGINEER OF RECORD FOR REVIEW. THE USE OF A POLYMER BASED WATER REDUCING ADMIXTURE IS OPTIONAL, BUT IF USED, SHALL BE SUBMITTED TO THE ENGINEER FOR REVIEW.
5. DESIGN MIXES TO PROVIDE NORMAL WEIGHT CONCRETE WITH THE FOLLOWING REQUIREMENTS:
   A. THE MAXIMUM ALLOWABLE CONCRETE SHRINKAGE (28 DAYS) SHALL BE AS FOLLOWS:

      .04% – WALLS

      .06% – SLABS, FOUNDATIONS AND ALL OTHER CONCRETE, U.N.O.

   B. FLY ASH SHALL BE A MINIMUM OF 15%, MAXIMUM OF 25%, OF THE TOTAL CEMENTITIOUS MATERIAL OF ALL MIX DESIGNS FOR CONCRETE > 4000 P.S.I.. FLY ASH WITH THESE SAME LIMITS MAY ALSO BE USED IN ANY OTHER MIX DESIGN FOR CONCRETE STRENGTH < 4000 P.S.I.
   C. FLY ASH SHALL CONFORM TO ASTM C–618, CLASS F, WITH MAXIMUM LOSS ON IGNITION (L.O.I.)TO BE 3%.
   D. MAXIMUM ALLOWABLE WATER–TO–CEMENT (W/C) RATIO SHALL INCLUDE THE TOTAL WEIGHT OF CEMENT AND FLY ASH.
6. CONCRETE SHALL BE CURED AND PROTECTED IN ACCORDANCE WITH ACI 308.1–11.
7. CONCRETE SHALL NOT FREE FALL MORE THAN FIVE FEET. USE TREMIE OR PUMP.
8. LOCATION OF CONSTRUCTION JOINTS AND OTHER TYPES OF JOINTS, OTHER THAN THOSE SPECIFIED OR DETAILED, SHALL BE APPROVED BY THE ENGINEER BEFORE PLACEMENT OF CONCRETE.
9. ALL CONCRETE WITH 28 DAY STRENGTH GREATER THAN 2500 PSI SHALL BE INSPECTED IN ACCORDANCE WITH THE REQUIREMENTS AND FREQUENCY OF INSPECTION DEFINED IN IBC TABLE 1705.3 AS PRESENTED ON VERIFICATION AND INSPECTION NOTES AND TABLES – SEE SPECIAL INSPECTION NOTES. ANY EXCEPTIONS TO THIS REQUIREMENT WILL BE STATED ON THE PLANS OR SPECIFIC DETAILS.
10. PRIOR TO PLACING CONCRETE, REINFORCING STEEL AND EMBEDDED ITEMS SHALL BE WELL–SECURED IN POSITION.
11. SLEEVES NOT SPECIFICALLY SHOWN ON THE DRAWINGS SHALL BE LOCATED BY THE TRADES INVOLVED AND SHALL BE REVIEWED BY THE ENGINEER BEFORE THE CONCRETE IS PLACED. CHECK WITH ALL TRADES TO ENSURE PROPER PLACEMENT OF OPENINGS, SLEEVES, CURBS, CONDUITS, ETC., RELATED TO THE WORK. PIPES, CONDUITS OR DUCTS MAY PASS THROUGH STRUCTURAL CONCRETE IN EMBEDDED SLEEVES BUT SHALL NOT BE EMBEDDED IN STRUCTURAL SLABS, WALLS, CONTINUOUS FOOTINGS, GRADE BEAMS, SPREAD FOOTINGS, ETC. UNLESS SPECIFICALLY APPROVED BY THE ENGINEER. THE SPREAD FOOTING MAY BE LOWERED TO ALLOW THE PASSAGE OF PIPES, CONDUITS OR DUCTS THROUGH NON–STRUCTURAL SLABS. CONTRACTOR SHALL BE RESPONSIBLE FOR DETERMINING ELEVATIONS OF ALL FOUNDATIONS, COORDINATING WORK OF ALL TRADES PRIOR TO ANY PLACEMENT OF CONCRETE AND SHALL NOTIFY THE ENGINEER OF FIELD MODIFICATIONS.
12. SUPERIMPOSED LOADS SHALL NOT BE APPLIED TO ELEVATED STRUCTURAL CONCRETE MEMBERS PRIOR TO 7 DAYS MINIMUM AFTER CONCRETE PLACEMENT AND UNTIL 28 DAY STRENGTH HAS BEEN REACHED. SHORING SHALL REMAIN IN PLACE UNTIL CONCRETE HAS REACHED DESIGN STRENGTH. RESHORING SHALL REMAIN IN PLACE 28 DAYS MINIMUM. AT NO TIME DURING THE RESHORING PROCESS SHALL THE CONCRETE MEMBER BE UNSUPPORTED.
13. PROVIDE 3/4" CHAMFER AT EXPOSED EDGES OF CURBS, WALLS, CONCRETE BEAMS AND COLUMNS AND ALL OTHERVISIBLE EXTERIOR CONSTRUCTION JOINTS, U.N.O.
14. NON–SHRINK GROUT: SHALL CONFORM TO ASTM C–1107. MIN F'C = 6500 P.S.I. AT 28 DAYS.
15. ALL STRUCTURAL CONCRETE IS TO BE REINFORCED. UNLESS SHOWN OTHERWISE, SLABS ARE TO HAVE A MINIMUM REINFORCEMENT PERCENTAGE OF 0.20 CONTINUOUS EACH WAY AND WALLS ARE TO HAVE MINIMUM REINFORCEMENT PERCENTAGES OF 0.25 CONTINUOUS IN THE HORIZONTAL DIRECTION AND 0.15 CONTINUOUS IN THE VERTICAL DIRECTION.
16. CONCRETE FLOOR AND SLAB ON GRADE CONSTRUCTION SHALL CONFORM TO THE REQUIREMENTS OF ACI 302, "GUIDE FOR CONCRETE FLOOR AND SLAB CONSTRUCTION". FLATNESS / LEVELNESS SHALL CONFORM TO THE REQUIREMENTS OF ASTM E1155.

FOUNDATION NOTES

1. THE CONTRACTOR SHALL BE RESPONSIBLE FOR ALL SHORING, ETC. NECESSARY TO SUPPORT CUT AND/OR FILL BANKS DURING EXCAVATION AND FORMING AND PLACEMENT OF CONCRETE.
2. IF A GEOTECHNICAL ENGINEER HAS BEEN ENGAGED TO PROVIDE GEOTECHNICAL ENGINEERING SERVICES FOR THIS SITE AND SCOPE OF WORK, THE GEOTECHNICAL REPORT IN ITS ENTIRETY SHALL BE INCLUDED AS PART OF THESE CONTRACT DOCUMENTS AND SHALL SERPERSEDE ANY CONFLICTING DIRECTIVES CONTAINED WITHIN THESE NOTES, SHOULD ANY CONFLICTS BE PRESENT. FOR RECOMMENDED SOIL BEARING PRESSURE, FOUNDATION MATERIAL, FILL, FOUNDATION EXCAVATION AND SITE GRADING, REFER TO THE GEOTECHNICAL REPORT. ALL FILL AND FOUNDATION EXCAVATION SHALL BE OBSERVED AND APPROVED BY THE PROJECT GEOTECHNICAL ENGINEER PRIOR TO PLACING CONCRETE.
3. THE DESIGN ALLOWABLE SOIL BEARING PRESSURE IS 1500 PSF.
4. STRUCTURAL EXCAVATION:
   A. AFTER EXCAVATION, THE EXPOSED SOILS SHALL BE INSPECTED AND TESTED. ANY UNSUITABLE DEPOSITS SHALL BE REMOVED AS DIRECTED TO REACH SUITABLE BEARING SOIL. ALL OVER–EXCAVATED AREAS SHALL BE BACK FILLED WITH SELECT STRUCTURAL FILL OR WITH LEAN CONCRETE FILL TO THE ELEVATION OF THE BOTTOM OF FOOTING OR FOUNDATION AS INDICATED ON THE DRAWINGS.
   B. NO FOUNDATIONS OR STRUCTURES SHALL BE CONSTRUCTED UNTIL THE BASE MATERIALS HAVE BEEN INSPECTED BY THE CARRIER CONSTRUCTION SUPERVISOR.
5. BACKFILL:
   A. FILL AND BACKFILL SHALL BE COMPACTED TO 95% OF MAX. DENSITY IN ACCORDANCE WITH ASTM TEST METHOD D–1557. FLOODING NOT PERMITTED.
   B. BACK FILL SHALL NOT BE PLACED SOONER THAN THE FOUNDATION OR RETAINING STRUCTURE HAS REACHED THE FULL DESIGN STRENGTH UNLESS OTHERWISE DIRECTED IN WRITING BY THE ENGINEER.
   C. PRIOR TO PLACING BACKFILL AROUND STRUCTURES, ALL FORMS SHALL HAVE BEEN REMOVED AND THE EXCAVATION CLEANED OF ALL TRASH, DEBRIS AND UNSUITABLE MATERIALS.
6. TRENCH EXCAVATION:
   A. UTILITY TRENCHES SHALL BE EXCAVATED TO THE LINES AND GRADES SHOWN ON THE DRAWINGS OR AS DIRECTED BY THE CARRIER CONSTRUCTION SUPERVISOR. PROVIDE SHORING, SHEETING AND BRACING AS REQUIRED TO PREVENT CAVING OR SLOUGHING OF THE TRENCH WALLS.
   B. THE TRENCH WIDTH EXTENDS A MINIMUM OF 6 INCHES BEYOND EACH OUTSIDE EDGE OF THE CONDUIT OR OUTERMOST CONDUIT, WHICHEVER IS APPLICABLE.
   C. WHEN SOFT, YIELDING OR OTHERWISE UNSTABLE SOIL CONDITIONS ARE ENCOUNTERED AT THE REQUIRED TRENCH BOTTOM ELEVATION, OVER–EXCAVATE THE TRENCH TO A DEPTH OF NO LESS THAN 12 INCHES BELOW THE REQUIRED ELEVATION AND BACKFILL WITH GRANULAR BEDDING MATERIAL.
7. TRENCH BACK FILL:
   A. PROVIDE GRANULAR BEDDING MATERIAL IN ACCORDANCE WITH THE SPECIFICATIONS, DRAWINGS AND THE UTILITY REQUIREMENTS, UNLESS OTHERWISE DIRECTED BY THE GEOTECHNICAL ENGINEER
   B. NOTIFY THE CARRIER CONSTRUCTION SUPERVISOR 24 HOURS IN ADVANCE OF BACK FILLING.
   C. CONDUCT UTILITY CHECK TESTS BEFORE BACK FILLING BACK FILL AND COMPACT TRENCH BEFORE ACCEPTANCE TESTING.
   D. PLACE GRANULAR TRENCH BACKFILL UNIFORMLY ON BOTH SIDES OF THE CONDUITS IN 6–INCH UNCOMPACTED LIFTS UNTIL 12 INCHES OVER THE CONDUITS. SOLIDLY RAM AND TAMP BACKFILL INTO SPACES AROUND THE CONDUITS.
   E. PROTECT CONDUIT FROM LATERAL MOVEMENT, DAMAGE FROM IMPACT OR UNBALANCED LOADING.
   F. ABOVE THE CONDUIT EMBEDMENT ZONE, PLACE AND COMPACT SATISFACTORY BACKFILL MATERIAL IN 9–INCH MAXIMUM LOOSE THICKNESS LIFTS TO RESTORE THE REQUIRED FINISHED SURFACE GRADE.
   G. COMPACT FINAL TRENCH BACKFILL TO A DENSITY EQUAL TO OR GREATER THAN THAT OF THE EXISTING UNDISTURBED MATERIAL IMMEDIATELY ADJACENT TO THE TRENCH BUT NO LESS THAN A MINIMUM OF 95% OF MAX. DENSITY IN ACCORDANCE WITH ASTM TEST METHOD D–1557.
8. AGGREGATE ACCESS ROAD:
   A. CLEAR, GRUB, STRIP AND EXCAVATE FOR THE ACCESS ROAD AND TOWER COMPOUND TO THE LINES AND GRADES INDICATED ON THE DRAWINGS. SCARIFY TO A DEPTH OF 6 INCHES AND PROOF–ROLL ALL HOLES, RUTS, SOFT PLACES AND OTHER DEFECTS.
   B. THE AGGREGATE SUB BASE AND BASE SHALL BE IMMEDIATELY COMPACTED TO 95% OF MAX. DENSITY IN ACCORDANCE WITH ASTM TEST METHOD D–1557.
   C. AFTER PREPARATION OF THE SUB GRADE IS COMPLETED, THE GEOTEXTILE FABRIC SHALL BE INSTALLED TO THE LIMITS INDICATED ON THE DRAWINGS BY ROLLING THE FABRIC OUT LONGITUDINALLY ALONG THE ROADWAY OR SITE. THE FABRIC SHALL NOT BE DRAGGED ACROSS THE SUB GRADE. PLACE THE ENTIRE ROLL IN A SINGLE OPERATION, ROLLING THE MATERIAL AS SMOOTHLY AS POSSIBLE.
      I. OVERLAPS PARALLEL TO THE ROADWAY AND SITE WILL BE PERMITTED AT THE CENTERLINE AND AT LOCATIONS BEYOND THE ROADWAY OR SITE SURFACE WIDTH (I.E. WITHIN THE SHOULDER WIDTH) ONLY. NO LONGITUDINAL OVERLAPS SHALL BE LOCATED BETWEEN THE CENTERLINE AND THE SHOULDER. PARALLEL OVERLAPS SHALL BE A MINIMUM OF 3 FEET WIDE.
      II. TRANSVERSE (PERPENDICULAR TO THE ROADWAY) OVERLAPS AT THE END OF A ROLL SHALL OVERLAP IN THE DIRECTION OF THE AGGREGATE PLACEMENT (PREVIOUS ROLL ON TOP) AND SHALL HAVE A MINIMUM LENGTH OF 3 FEET.
      III. ALL OVERLAPS SHALL BE PINNED WITH STAPLES OR NAILS BETWEEN 10 AND 12 INCHES LONG TO ENSURE STABLE POSITIONING DURING THE PLACEMENT OF AGGREGATE. PIN LONGITUDINAL SEAMS AT 25–FOOT CENTERS AND TRANSVERSE SEAMS EVERY 5 FEET ON CENTER.
   D. THE AGGREGATE SUB BASE, BASE AND SURFACE COURSES SHALL BE CONSTRUCTED IN LAYERS NOT MORE THAN 4 INCHES (COMPACTED) THICKNESS. AGGREGATE TO BE PLACED ON GEOTEXTILE FABRIC SHALL BE END–DUMPED ON THE FABRIC FROM THE FREE END OF THE FABRIC OR OVER PREVIOUSLY PLACED AGGREGATE. AT NO TIME SHALL EQUIPMENT, EITHER DUMPING THE AGGREGATE OR GRADING THE AGGREGATE, BE PERMITTED ON THE ROADWAY OR COMPOUND WITH LESS THAN 8 INCHES OF MATERIAL COVERING THE FABRIC.
9. FINISH GRADING
   A. PERFORM ALL FINISHED GRADING TO PROVIDE SMOOTH, EVEN SURFACE AND SUBSURFACE DRAINAGE OF THE ENTIRE AREA WITHIN THE LIMITS OF CONSTRUCTION. GRADING SHALL BE COMPATIBLE WITH ALL SURROUNDING TOPOGRAPHY AND STRUCTURES.
   B. UTILIZE SATISFACTORY FILL MATERIALS RESULTING FROM THE EXCAVATION WORK IN THE CONSTRUCTION OF FILLS, EMBANKMENTS AND FOR THE REPLACEMENT OF REMOVED UNSUITABLE MATERIALS.
   C. REPAIR ALL ACCESS ROADS AND SURROUNDING AREAS USED DURING THE COURSE OF THIS WORK TO THEIR ORIGINAL CONDITION.

CONCRETE REINFORCING STEEL

1. REINFORCING STEEL FOR CONCRETE SHALL BE DEFORMED STEEL CONFORMING TO THE REQUIREMENTS OF ASTM A–615, (DEFORMATIONS SHALL BE IN ACCORDANCE WITH ASTM A 305 AS FOLLOWS:

   GRADE 60: (#4 BARS AND LARGER)

   GRADE 40: (#3 BARS)

   THE ACTUAL YIELD STRENGTH BASED ON MILL TESTS SHALL NOT EXCEED THE SPECIFIED YIELD STRENGTH BY MORE THAN 18,000 PSI (RETESTS SHALL NOT EXCEED THIS VALUE BY MORE THAN AN ADDITIONAL 3000PSI) AND THE RATIO OF THE ACTUAL ULTIMATE TENSILE STRESS TO ACTUAL YIELD STRENGTH SHALL NOT BE LESS THAN 1.25.
2. WWF SHALL CONFORM TO ASTM A 82 AND ASTM A 185. LAP 1 1/2 SPACES (9" MIN.)
3. DETAILING, FABRICATION, AND ERECTION OF REINFORCING BARS SHALL CONFORM TO A.C.I. "MANUAL OF STANDARD PRACTICE FOR DETAILING REINFORCING CONCRETE STRUCTURES."
4. MIN. COVER FOR CAST–IN–PLACE CONCRETE SHALL BE AS FOLLOWS:

   CAST AGAINST EARTH ..... 3"

   CAST AGAINST FORM BELOW GRADE ..... 2"

   FORMED SLABS (#11 BAR & SMALLER) ..... 3/4"

   SLABS ON GRADE (FROM TOP OF SLAB) ..... 1"

   COLUMNS AND BEAMS (MAIN BARS) ..... 2"

   WALLS EXPOSED TO WEATHER (#6 – #18 BARS) ..... 2"
   (#5 & SMALLER) .....1 1/2"

   NOT EXPOSED TO WEATHER (#11 & SMALLER) ..... 3/4"

5. BARS SHALL BE CLEAN OF RUST, GREASE OR OTHER MATERIAL LIKELY TO IMPAIR BOND. BEND SHALL BE MADE COLD.
6. PRIOR TO PLACING OF CONCRETE, REINFORCING STEEL AND EMBEDDED ITEMS SHALL BE WELL SECURED IN POSITION.
7. WHEN WELDING OF REINFORCING BARS IS REQUIRED, IN ADDITION TO THE REQUIREMENTS OF ASTM A–615, A REPORT OF MATERIAL PROPERTIES SHALL BE PROVIDED BY THE REINFORCING MANUFACTURER TO VERIFY THAT MATERIAL PROPERTIES ARE THOSE NECESSARY FOR CONFORMANCE WITH WELDING PROCEDURES SPECIFIED IN AWS D1.4, "STRUCTURAL WELDING CODE – REINFORCING STEEL". IN LIEU OF SUPPLYING A SUPPLEMENTAL REPORT, BARS CONFORMING TO ASTM A–706 MAY BE USED. E90XX ELECTRODES SHALL BE USED TO WELD REINFORCING BARS.
8. WHEN REQUIRED, CONTINUOUS INSPECTION OF CONCRETE SHALL INCLUDE INSPECTION OF REINFORCING STEEL IN ACCORDANCE WITH THE REQUIREMENTS OF IBC TABLE 1705.3 AS PRESENTED ON VERIFICATION AND INSPECTION NOTES AND TABLES – SEE SPECIAL INSPECTION NOTES. INSPECTION SHALL BE SCHEDULED SO THAT PLACEMENT OF REINFORCING STEEL, CONDUIT, SLEEVES, AND EMBEDDED ITEMS MAY BE CORRECTED PRIOR TO PLACEMENT OF OVERLYING GRIDS OF REINFORCING STEEL.
9. FOR STANDARD REBAR HOOKS, REFER TO THE STANDARD HOOK DETAIL CONTAINED HEREIN, AND FOR STANDARD REBAR SPLICE REQUIREMENTS, REFER TO THE STANDARD REBAR SPLICE DETAIL CONTAINED HEREIN.

T-Mobile

AMERICAN TOWER®

POWDER RIVER
Development Services, LLC

REVISIONS

REV	DATE	DESCRIPTION	INT
E	04/04/19	ISSUED FOR REVIEW 90%	MAB
D	05/23/18	ISSUED FOR REVIEW 90%	RJP
C	03/07/18	ISSUED FOR REVIEW 90%	TRT
B	02/07/17	ISSUED FOR REVIEW 90%	JPN
A	09/06/17	ISSUED FOR REVIEW 90%	JHT

PRELIMINARY
NOT FOR
CONSTRUCTION

THESE PLANS AND SPECIFICATIONS, AS INSTRUMENTS OF SERVICE, ARE AND SHALL REMAIN THE PROPERTY OF POWDER RIVER DEVELOPMENT SERVICES, LLC WHETHER THE PROJECTS FOR WHICH THEY ARE MADE ARE EXECUTED OR NOT. THESE DRAWINGS AND SPECIFICATIONS SHALL NOT BE USED BY ANY PERSON OR ENTITY ON OTHER PROJECTS WITHOUT PRIOR WRITTEN CONSENT OF THE ENGINEER.

SITE INFORMATION

T-MOBILE #: PO02600A

ATC #: 310444

184 RATTLESNAKE ROAD
CENTERVILLE, OREGON
98613

SHEET TITLE:

SHEET NUMBER:

GN-3

THE INFORMATION CONTAINED IN THIS SET OF CONSTRUCTION DOCUMENTS IS PROPRIETARY BY NATURE. ANY USE OR DISCLOSURE OTHER THAN THAT WHICH RELATES TO CARRIER SERVICES IS STRICTLY PROHIBITED.

DISCLAIMER:

THESE DRAWINGS WERE PRODUCED WITHOUT THE BENEFIT OF A CURRENT LAND SURVEY. ALL PROPERTY LINES, EASEMENTS, SETBACKS, AND DIMENSIONS SHOWN SHALL BE VERIFIED PRIOR TO START OF CONSTRUCTION. POWDER RIVER DEVELOPMENT SERVICES, LLC. DOES NOT GUARANTEE THE ACCURACY OF SAID PROPERTY LINES, EASEMENTS, SETBACKS, AND DIMENSIONS SHOWN.

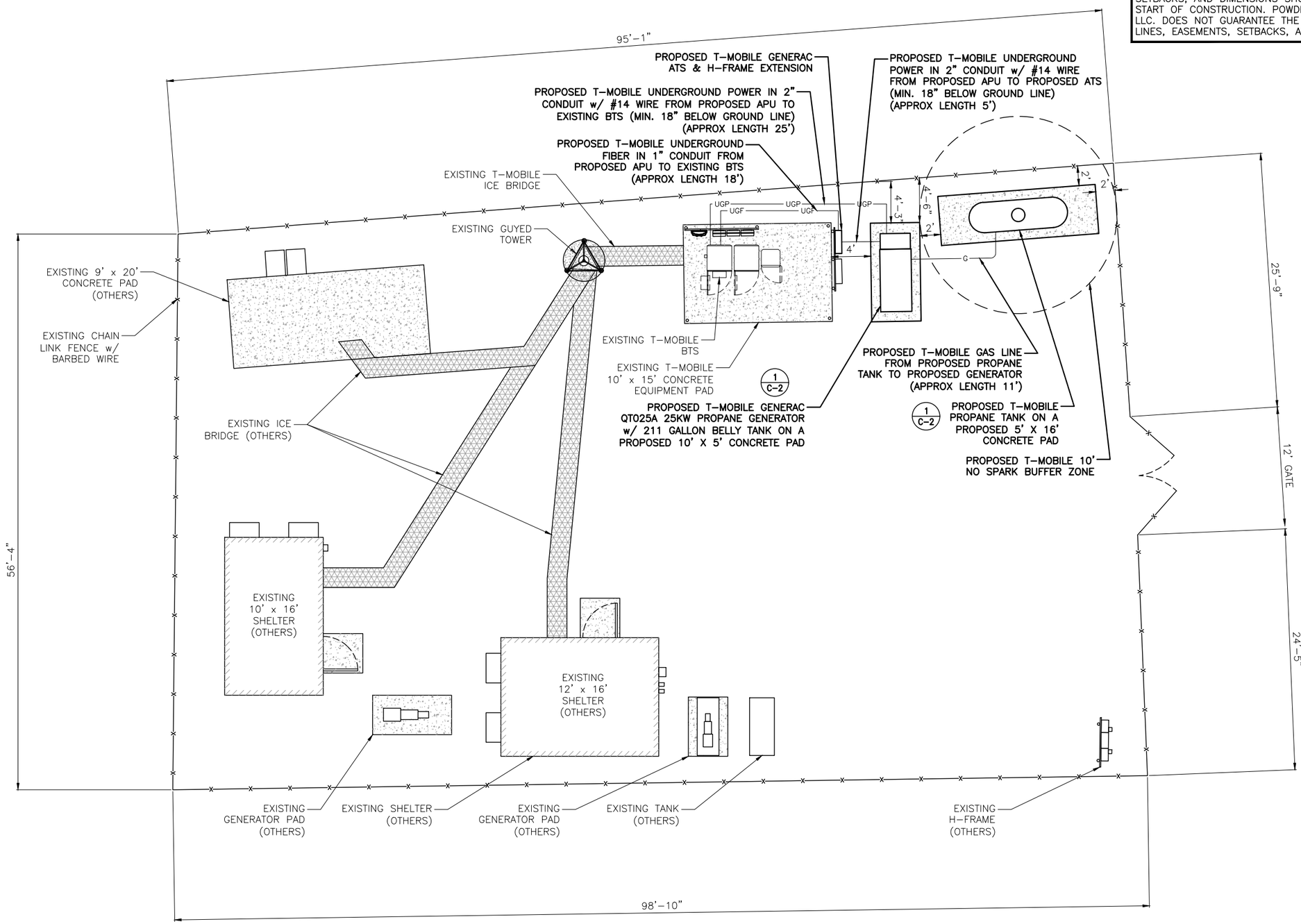

811 Know what's below. Call before you dig.

SITE PLAN

SCALE: 3/32" = 1'-0" (11x17)

1

T-Mobile

AMERICAN TOWER®

POWDER RIVER Development Services, LLC

REVISIONS

REV	DATE	DESCRIPTION	INT
E	04/04/19	ISSUED FOR REVIEW 90%	MAB
D	05/23/18	ISSUED FOR REVIEW 90%	RJP
C	03/07/18	ISSUED FOR REVIEW 90%	TRT
B	02/07/17	ISSUED FOR REVIEW 90%	JPN
A	09/06/17	ISSUED FOR REVIEW 90%	JHT

PRELIMINARY NOT FOR CONSTRUCTION

THESE PLANS AND SPECIFICATIONS, AS INSTRUMENTS OF SERVICE, ARE AND SHALL REMAIN THE PROPERTY OF POWDER RIVER DEVELOPMENT SERVICES, LLC WHETHER THE PROJECTS FOR WHICH THEY ARE MADE ARE EXECUTED OR NOT. THESE DRAWINGS AND SPECIFICATIONS SHALL NOT BE USED BY ANY PERSON OR ENTITY ON OTHER PROJECTS WITHOUT PRIOR WRITTEN CONSENT OF THE ENGINEER.

SITE INFORMATION

T-MOBILE #: PO02600A

ATC #: 310444

184 RATTLESNAKE ROAD CENTERVILLE, OREGON 98613

SHEET TITLE:

SITE PLAN

SHEET NUMBER:

C-1

THE INFORMATION CONTAINED IN THIS SET OF CONSTRUCTION DOCUMENTS IS PROPRIETARY BY NATURE. ANY USE OR DISCLOSURE OTHER THAN THAT WHICH RELATES TO CARRIER SERVICES IS STRICTLY PROHIBITED.

ALL EQUIPMENT AND COMPONENTS SHALL BE ANCHORED IN ACCORDANCE WITH ALL CURRENT BUILDING CODE REQUIREMENTS, AS APPLICABLE. ANCHOR DESIGN AND SPECIFICATION IS NOT INCLUDED AS PART OF THIS SCOPE, BUT SHALL BE PROVIDED PRIOR TO CONSTRUCTION, FOR ALL EQUIPMENT, MECHANICAL AND ELECTRICAL COMPONENTS THAT ARE SUPPORTED BY THIS SLAB FOUNDATION.

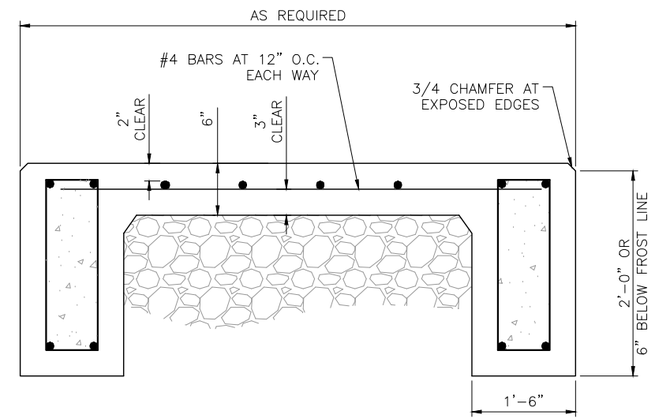

NOT USED	5	NOT USED	3	CONCRETE PAD DETAIL	SCALE: N.T.S. 1
NOT USED	6	NOT USED	4	NOT USED	2

T-Mobile

AMERICAN TOWER®

POWDER RIVER
Development Services, LLC

REVISIONS

REV	DATE	DESCRIPTION	INT
E	04/04/19	ISSUED FOR REVIEW 90%	MAB
D	05/23/18	ISSUED FOR REVIEW 90%	RJP
C	03/07/18	ISSUED FOR REVIEW 90%	TRT
B	02/07/17	ISSUED FOR REVIEW 90%	JPN
A	09/06/17	ISSUED FOR REVIEW 90%	JHT

PRELIMINARY
NOT FOR
CONSTRUCTION

THESE PLANS AND SPECIFICATIONS, AS INSTRUMENTS OF SERVICE, ARE AND SHALL REMAIN THE PROPERTY OF POWDER RIVER DEVELOPMENT SERVICES, LLC WHETHER THE PROJECTS FOR WHICH THEY ARE MADE ARE EXECUTED OR NOT. THESE DRAWINGS AND SPECIFICATIONS SHALL NOT BE USED BY ANY PERSON OR ENTITY ON OTHER PROJECTS WITHOUT PRIOR WRITTEN CONSENT OF THE ENGINEER.

SITE INFORMATION

T-MOBILE #: PO02600A

ATC #: 310444

184 RATTLESNAKE ROAD
CENTERVILLE, OREGON
98613

SHEET TITLE:

CONCRETE DETAILS

SHEET NUMBER:

C-2

THE INFORMATION CONTAINED IN THIS SET OF CONSTRUCTION DOCUMENTS IS PROPRIETARY BY NATURE. ANY USE OR DISCLOSURE OTHER THAN THAT WHICH RELATES TO CARRIER SERVICES IS STRICTLY PROHIBITED.

QT025A | 2.4L | 25 kW

INDUSTRIAL SPARK-IGNITED GENERATOR SET

EPA Certified Stationary Emergency

GENERAC | INDUSTRIAL POWER

STANDBY POWER RATING

25 kW, 31 kVA, 60 Hz

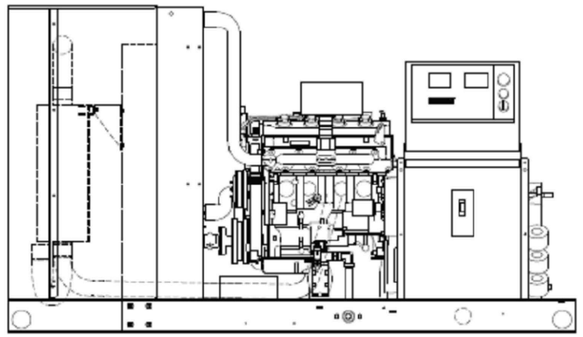

Image used for illustration purposes only

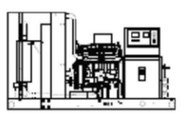

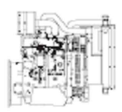

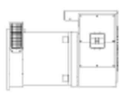

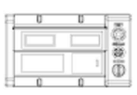

Features	Benefits
Generator Set	
• PROTOTYPE & TORSIONALLY TESTED	› PROVIDES A PROVEN UNIT
• UL2200 TESTED	› ENSURES A QUALITY PRODUCT
• RHINOCOAT PAINT SYSTEM	› IMPROVES RESISTANCE TO ELEMENTS
Engine	
• EPA COMPLIANT	› ENVIRONMENTALLY FRIENDLY
• INDUSTRIAL TESTED, GENERAC APPROVED	› ENSURES INDUSTRIAL STANDARDS
• POWER-MATCHED OUTPUT	› ENGINEERED FOR PERFORMANCE
• INDUSTRIAL GRADE	› IMPROVES LONGEVITY AND RELIABILITY
Alternator	
• TWO-THIRDS PITCH	› ELIMINATES HARMFUL 3RD HARMONIC
• LAYER WOUND ROTOR & STATOR	› IMPROVES COOLING
• CLASS H MATERIALS	› HEAT TOLERANT DESIGN
• DIGITAL 3-PHASE VOLTAGE CONTROL	› FAST AND ACCURATE RESPONSE
Controls	
• ENCAPSULATED BOARD W/ SEALED HARNESS	› EASY, AFFORDABLE REPLACEMENT
• 4-20mA VOLTAGE-TO-CURRENT SENSORS	› NOISE RESISTANT 24/7 MONITORING
• SURFACE-MOUNT TECHNOLOGY	› PROVIDES VIBRATION RESISTANCE
• ADVANCED DIAGNOSTICS & COMMUNICATIONS	› HARDENED RELIABILITY

SPEC SHEET

QT025A | 2.4L | 25 kW

INDUSTRIAL SPARK-IGNITED GENERATOR SET

EPA Certified Stationary Emergency

GENERAC | INDUSTRIAL POWER

APPLICATION AND ENGINEERING DATA

ENGINE SPECIFICATIONS

General

Make	Generac
EPA Emissions Compliance	Stationary Emergency
EPA Emissions Engine Reference	See Emissions Data Sheet
Cylinder #	4
Type	In-line
Displacement - L (cu in)	2.4
Bore - mm (in)	86.61 (3.41)
Stroke - mm (in)	100.08 (3.94)
Compression Ratio	9.5:1
Intake Air Method	Nuturally Aspirated
Number of Main Bearings	5
Connecting Rods	Forged
Cylinder Head	Aluminum
Cylinder Liners	No
Ignition	High Energy
Piston Type	Aluminum Alloy
Crankshaft Type	Cast
Lifter Type	Overhead Cam
Intake Valve Material	Steel Alloy
Exhaust Valve Material	Hardened Steel
Hardened Valve Seats	yes

Engine Governing

Governor	Electronic
Frequency Regulation (Steady State)	+/- 0.25%

*Fuel pressure must remain within specified range and not drop more than 1 in. w.c from static (no-load) to full load.

Lubrication System

Oil Pump Type	Gear
Oil Filter Type	Full-Flow sping-on Cartridge
Crankcase Capacity - L (qts)	3.8 (4)

Cooling System

Cooling System Type	Pressurized Closed
Water Pump Flow -gal/min	11
Fan Type	Pusher
Fan Speed (rpm)	2150
Fan Diameter mm (in)	457 (18)
Coolant Heater Wattage	1500
Coolant Heater Standard Voltage	120 VAC

Fuel System

Fuel Type	Natural Gas, Propane Vapor
Carburetor	Down Draft
Secondary Fuel Regulator	Standard
Fuel Shut Off Solenoid	Standard
Operating Fuel Pressure (Standard)	5" - 14" H_2O*

Engine Electrical System

System Voltage	12 VDC
Battery Charging Alternator (Amps)	30
Battery Size	See Battery Index 0161970SBY
Battery Voltage	12 VDC
Ground Polarity	Negative

ALTERNATOR SPECIFICATIONS

Standard Model	390mm
Poles	4
Field Type	Revolving
Insulation Class - Rotor	H
Insulation Class - Stator	H
Total Harmonic Distortion	<5%
Telephone Interference Factor (TIF)	<50
Standard Excitation	Brush Type
Bearings	Sealed Ball
Coupling	Flexible Disc
Load Capacity - Standby	100%
Prototype Short Circuit Test	Yes
Voltage Regulator Type	Full Digital
Number of Sensed Phases	3
Regulation Accuracy (Steady State)	±0.25%

CODES AND STANDARDS COMPLIANCE (WHERE APPLICABLE)

NFPA 99	BS5514
NFPA 110	SAE J1349
ISO 8528-5	DIN6271
ISO 1708A.5	IEEE C62.41 TESTING
ISO 3046	NEMA ICS 1
	UL2200

Rating Definitions:
Standby – Applicable for a varying emergency load for the duration of a utility power outage with no overload capability. (Max. load factor = 70%)

SPEC SHEET

T-Mobile

AMERICAN TOWER®

POWDER RIVER Development Services, LLC

REVISIONS

REV	DATE	DESCRIPTION	INT
E	04/04/19	ISSUED FOR REVIEW 90%	MAB
D	05/23/18	ISSUED FOR REVIEW 90%	RJP
C	03/07/18	ISSUED FOR REVIEW 90%	TRT
B	02/07/17	ISSUED FOR REVIEW 90%	JPN
A	09/06/17	ISSUED FOR REVIEW 90%	JHT

PRELIMINARY NOT FOR CONSTRUCTION

THESE PLANS AND SPECIFICATIONS, AS INSTRUMENTS OF SERVICE, ARE AND SHALL REMAIN THE PROPERTY OF POWDER RIVER DEVELOPMENT SERVICES, LLC WHETHER THE PROJECTS FOR WHICH THEY ARE MADE ARE EXECUTED OR NOT. THESE DRAWINGS AND SPECIFICATIONS SHALL NOT BE USED BY ANY PERSON OR ENTITY ON OTHER PROJECTS WITHOUT PRIOR WRITTEN CONSENT OF THE ENGINEER.

SITE INFORMATION

T-MOBILE #: PO02600A

ATC #: 310444

184 RATTLESNAKE ROAD
CENTERVILLE, OREGON
98613

SHEET TITLE:

GENERATOR SPECIFICATIONS

SHEET NUMBER:

C-3

THE INFORMATION CONTAINED IN THIS SET OF CONSTRUCTION DOCUMENTS IS PROPRIETARY BY NATURE. ANY USE OR DISCLOSURE OTHER THAN THAT WHICH RELATES TO CARRIER SERVICES IS STRICTLY PROHIBITED.

QT025A | 2.4L | 25 kW

INDUSTRIAL SPARK-IGNITED GENERATOR SET

EPA Certified Stationary Emergency

GENERAC | INDUSTRIAL POWER

OPERATING DATA

POWER RATINGS

		Natural Gas	Propane Vapor
Single-Phase 120/240 VAC @1.0pf	25 kW	Amps: 104	Amps: 104
Three-Phase 120/208 VAC @0.8pf	25 kW	Amps: 87	Amps: 87
Three-Phase 120/240 VAC @0.8pf	25 kW	Amps: 75	Amps: 75
Three-Phase 277/480 VAC @0.8pf	25 kW	Amps: 38	Amps: 38

STARTING CAPABILITIES (sKVA)

sKVA vs. Voltage Dip

		480 VAC						208/240 VAC					
Alternator	kW	10%	15%	20%	25%	30%	35%	10%	15%	20%	25%	30%	35%
Standard	25	16	25	33	41	49	57	12	19	25	31	37	43

FUEL CONSUMPTION RATES*

Natural Gas

Percent Load	ft³/hr	m³/hr
25%	140	3.9
50%	220	6.2
75%	300	8.5
100%	380	10.8

Propane Vapor

Percent Load	ft³/hr	m³/hr
25%	56	1.6
50%	87	2.5
75%	119	3.4
100%	151	4.3

* Fuel supply installation must accommodate fuel consumption rates at 100% load.

COOLING

		Standby
Air Flow (inlet air combustion and radiator)	ft³/min(m³/min)	1500 (42.48)
System Coolant Capacity	gal (Liters)	2.5 (9.46)
Heat Rejection to Coolant	BTU/hr	95,000
Max. Operating Ambient Temperature	°F (°C)	122 (50)
Max. Ambient Temperature	°F (°C)	104 (40)
Maximum Radiator Backpressure	in H_2O	0.5

COMBUSTION AIR REQUIREMENT

		Standby
Flow at Rated Power cfm	(m³/min)	70

ENGINE

		Standby
Rated Engine Speed	rpm	1800
Horsepower at Rated kW**	hp	40
Piston Speed	ft/min	1182
BMEP	psi	120

** Refer to "Emissions Data Sheet" for maximum bHP for EPA and SCAQMD permitting purposes.

EXHAUST

		Standby
Exhaust Flow (Rated Output)	cfm (m³/min)	220 (6.2)
Max. Backpressure (Post Turbo)	inHg (Kpa)	1.5 (5.1)
Exhaust Temp (Rated Output - post silencer)	°F (°C)	975 (524)
Exhaust Outlet Size (Open Set)	mm (in)	63.5 (2.5)

Deration – Operational characteristics consider maximum ambient conditions. Derate factors may apply under atypical site conditions. Please consult a Generac Power Systems Industrial Dealer for additional details. All performance ratings in accordance with ISO3046, BS5514, ISO8528 and DIN6271 standards.

SPEC SHEET

3 OF 5

QT025A | 2.4L | 25 kW

INDUSTRIAL SPARK-IGNITED GENERATOR SET

EPA Certified Stationary Emergency

GENERAC | INDUSTRIAL POWER

STANDARD FEATURES AND OPTIONS

GENERATOR SET

● Genset Vibration Isolation	Std
○ Extended warranty	Opt
○ Gen-Link™ Communications Software	Opt
○ Steel Enclosure	Opt
○ Aluminum Enclosure	Opt

ENGINE SYSTEM

General

● Oil Drain Extension	Std
● Critical Exhaust Silencer	Std
● Air cleaner	Std
● Fan guard	Std
● Radiator duct adapter	Std

Fuel System

● Fuel lockoff solenoid	Std
● Secondary Fuel Regulator	Std
● Flexible fuel lines	Std

Cooling System

● 120VAC Coolant Heater	Std
● Closed Coolant Recovery System	Std
● UV/Ozone resistant hoses	Std
● Factory-Installed Radiator	Std
● Radiator Drain Extension	Std

Engine Electrical System

● Battery charging alternator	Std
● Battery cables	Std
● Battery tray	Std
● Solenoid activated starter motor	Std
● 10A UL float/equalize battery charger	Std
● Rubber-booted engine electrical connections	Std

ALTERNATOR SYSTEM

● UL2200 GENprotect™	Std
● Main Line Circuit Breaker	Std

CONTROL SYSTEM

Control Panel

● Digital H Control Panel - Dual 4x20 Display	Std
● Programmable Crank Limiter	Std
○ 21-Light Remote Annunciator	Opt
○ Remote Relay Panel (8 or 16)	Opt
● 7-Day Programmable Exerciser	Std
● Special Applications Programmable PLC	Std
● RS-232 Communications	Std
● RS-485 Communications	Std
● All-Phase Sensing DVR	Std
● Full System Status	Std
● Utility Monitoring (Req. H-Transfer Switch)	Std
● 2-Wire Start Compatible	Std
● Power Output (kW)	Std
● Power Factor	Std
● Reactive Power	Std
● All phase AC Voltage	Std
● All phase Currents	Std
● Oil Pressure	Std
● Coolant Temperature	Std
● Coolant Level	Std
● Fuel Pressure	Std
● Engine Speed	Std
● Battery Voltage	Std
● Frequency	Std
● Isochronous Governor Control	Std
● -40deg C - 70deg C Operation	Std
● Waterproof Plug-In Connectors	Std
● Audible Alarms and Shutdowns	Std
● Not in Auto (Flashing Light)	Std
● Auto/Off/Manual Switch	Std
● E-Stop (Red Mushroom-Type)	Std
● NFPA 110 Level I and II (Programmable)	Std
● Remote Communication - RS232	Std

Alarms (Programmable Tolerances, Pre-Alarms and Shutdowns)

● Low Fuel Pressure	Std
● Oil Pressure (Pre-programmed Low Pressure Shutdown)	Std
● Coolant Temperature (Pre-programmed High Temp Shutdown)	Std
● Coolant Level (Pre-programmed Low Level Shutdown)	Std
● Engine Speed (Pre-programmed Overspeed Shutdown)	Std
● Voltage (Pre-programmed Overvoltage Shutdown)	Std
● Battery Voltage	Std

SPEC SHEET

4 OF 5

T-Mobile

AMERICAN TOWER®

POWDER RIVER

Development Services, LLC

REVISIONS

REV	DATE	DESCRIPTION	INT
E	04/04/19	ISSUED FOR REVIEW 90%	MAB
D	05/23/18	ISSUED FOR REVIEW 90%	RJP
C	03/07/18	ISSUED FOR REVIEW 90%	TRT
B	02/07/17	ISSUED FOR REVIEW 90%	JPN
A	09/06/17	ISSUED FOR REVIEW 90%	JHT

PRELIMINARY NOT FOR CONSTRUCTION

THESE PLANS AND SPECIFICATIONS, AS INSTRUMENTS OF SERVICE, ARE AND SHALL REMAIN THE PROPERTY OF POWDER RIVER DEVELOPMENT SERVICES, LLC WHETHER THE PROJECTS FOR WHICH THEY ARE MADE ARE EXECUTED OR NOT. THESE DRAWINGS AND SPECIFICATIONS SHALL NOT BE USED BY ANY PERSON OR ENTITY ON OTHER PROJECTS WITHOUT PRIOR WRITTEN CONSENT OF THE ENGINEER.

SITE INFORMATION

T-MOBILE #: PO02600A

ATC #: 310444

184 RATTLESNAKE ROAD
CENTERVILLE, OREGON
98613

SHEET TITLE:

GENERATOR SPECIFICATIONS

SHEET NUMBER:

C-4

GENERATOR SPECIFICATIONS | SCALE: N.T.S. | 1

THE INFORMATION CONTAINED IN THIS SET OF CONSTRUCTION DOCUMENTS IS PROPRIETARY BY NATURE. ANY USE OR DISCLOSURE OTHER THAN THAT WHICH RELATES TO CARRIER SERVICES IS STRICTLY PROHIBITED.

QT025A | 2.4L | 25 kW

INDUSTRIAL SPARK-IGNITED GENERATOR SET

EPA Certified Stationary Emergency

GENERAC | INDUSTRIAL POWER

STANDARD FEATURES AND OPTIONS

GENERATOR SET

● Genset Vibration Isolation	Std
○ Extended warranty	Opt
○ Gen-Link™ Communications Software	Opt
○ Steel Enclosure	Opt
○ Aluminum Enclosure	Opt

ENGINE SYSTEM

General

● Oil Drain Extension	Std
● Critical Exhaust Silencer	Std
● Air cleaner	Std
● Fan guard	Std
● Radiator duct adapter	Std

Fuel System

● Fuel lockoff solenoid	Std
● Secondary Fuel Regulator	Std
● Flexible fuel lines	Std

Cooling System

● 120VAC Coolant Heater	Std
● Closed Coolant Recovery System	Std
● UV/Ozone resistant hoses	Std
● Factory-Installed Radiator	Std
● Radiator Drain Extension	Std

Engine Electrical System

● Battery charging alternator	Std
● Battery cables	Std
● Battery tray	Std
● Solenoid activated starter motor	Std
● 10A UL float/equalize battery charger	Std
● Rubber-booted engine electrical connections	Std

ALTERNATOR SYSTEM

● UL2200 GENprotect™	Std
● Main Line Circuit Breaker	Std

CONTROL SYSTEM

Control Panel

● Digital H Control Panel - Dual 4x20 Display	Std
● Programmable Crank Limiter	Std
○ 21-Light Remote Annunciator	Opt
○ Remote Relay Panel (8 or 16)	Opt
● 7-Day Programmable Exerciser	Std
● Special Applications Programmable PLC	Std
● RS-232 Communications	Std
● RS-485 Communications	Std
● All-Phase Sensing DVR	Std
● Full System Status	Std
● Utility Monitoring (Req. H-Transfer Switch)	Std
● 2-Wire Start Compatible	Std
● Power Output (kW)	Std
● Power Factor	Std
● Reactive Power	Std
● All phase AC Voltage	Std
● All phase Currents	Std
● Oil Pressure	Std
● Coolant Temperature	Std
● Coolant Level	Std
● Fuel Pressure	Std
● Engine Speed	Std
● Battery Voltage	Std
● Frequency	Std
● Isochronous Governor Control	Std
● -40deg C - 70deg C Operation	Std
● Waterproof Plug-In Connectors	Std
● Audible Alarms and Shutdowns	Std
● Not in Auto (Flashing Light)	Std
● Auto/Off/Manual Switch	Std
● E-Stop (Red Mushroom-Type)	Std
● NFPA 110 Level I and II (Programmable)	Std
● Remote Communication - RS232	Std

Alarms (Programmable Tolerances, Pre-Alarms and Shutdowns)

● Low Fuel Pressure	Std
● Oil Pressure (Pre-programmed Low Pressure Shutdown)	Std
● Coolant Temperature (Pre-programmed High Temp Shutdown)	Std
● Coolant Level (Pre-programmed Low Level Shutdown)	Std
● Engine Speed (Pre-programmed Overspeed Shutdown)	Std
● Voltage (Pre-programmed Overvoltage Shutdown)	Std
● Battery Voltage	Std

SPEC SHEET

4 OF 5

GENERATOR SPECIFICATIONS

SCALE: N.T.S.

1

THE INFORMATION CONTAINED IN THIS SET OF CONSTRUCTION DOCUMENTS IS PROPRIETARY BY NATURE. ANY USE OR DISCLOSURE OTHER THAN THAT WHICH RELATES TO CARRIER SERVICES IS STRICTLY PROHIBITED.

T-Mobile

AMERICAN TOWER®

POWDER RIVER
Development Services, LLC

REVISIONS

REV	DATE	DESCRIPTION	INT
E	04/04/19	ISSUED FOR REVIEW 90%	MAB
D	05/23/18	ISSUED FOR REVIEW 90%	RJP
C	03/07/18	ISSUED FOR REVIEW 90%	TRT
B	02/07/17	ISSUED FOR REVIEW 90%	JPN
A	09/06/17	ISSUED FOR REVIEW 90%	JHT

PRELIMINARY
NOT FOR
CONSTRUCTION

THESE PLANS AND SPECIFICATIONS, AS INSTRUMENTS OF SERVICE, ARE AND SHALL REMAIN THE PROPERTY OF POWDER RIVER DEVELOPMENT SERVICES, LLC WHETHER THE PROJECTS FOR WHICH THEY ARE MADE ARE EXECUTED OR NOT. THESE DRAWINGS AND SPECIFICATIONS SHALL NOT BE USED BY ANY PERSON OR ENTITY ON OTHER PROJECTS WITHOUT PRIOR WRITTEN CONSENT OF THE ENGINEER.

SITE INFORMATION

T-MOBILE #: PO02600A

ATC #: 310444

184 RATTLESNAKE ROAD
CENTERVILLE, OREGON
98613

SHEET TITLE:
GENERATOR SPECIFICATIONS

SHEET NUMBER:
C-5

100 - 400 Amps, 600 VAC

GENERAC® | INDUSTRIAL POWER

Automatic Transfer Switches

100 - 400 Amps, 600 VAC
100 - 400 Amps, 600 VAC

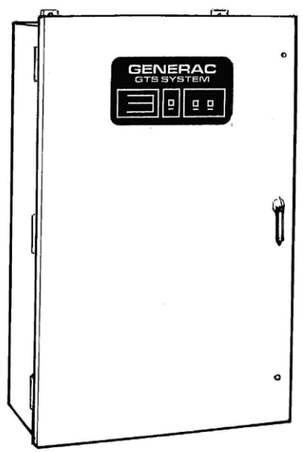

- **Standard time delay neutral will reduce switchover problems.**
- **Logic control with inphase monitor regulates switch functions and allows adjustable switch settings with LED indicators.**
- **Control switches located on the front of the door for ease of operation.**
- **All switches are UL 1008 listed and CSA certified.**
- **Electrically-operated, mechanically-held and interlocked main contacts with break before make design for fast, positive connections.**
- **Rated for all classes of load, 100% equipment rated, both inductive and resistive with no derations.**
- **2, 3, and 4 Pole 600 VAC contactors.**
- **160 millisecond transfer time.**

Standard Features

- Single coil design, electrically operated and mechanically held
- Programmable exerciser
- Main contacts are silver alloy to resist welding and sticking
- Conformal coating protects all printed circuit boards
- Indicating LED's for switch position—Normal, Emergency, and Standby Operating
- NEMA 1 enclosure with hinged door and key-locking handle
- Three-position switch—Fast Test, Auto, Normal Test
- Arc chutes on main contacts

Optional Accessories

- NEMA 12 enclosure
- NEMA 3R enclosure
- NEMA 4 & 4X enclosure
- Exterior AC meter package
- Controls accessible through door in door design on NEMA type 3R and 4 enclosures – key lock provided on access door
- 4-pole design for neutral isolation
- Single or double sets of auxiliary contacts
- Preferred source selector switch
- Manual 3 position selector switch
- Remote automatic control circuit
- Signal before transfer contacts
- Return to normal timer bypass

GENERAC® | INDUSTRIAL POWER

GTS Control Systems

LOGIC CONTROL w / Inphase Monitor	
Utility Voltage	
Dropout	75-95% (Adj.)
Pickup	85-95% (Adj.)
Line Interrupt	0.1-10 Sec. (Adj.)
Engine Minimum Run	5-30 Min. (Adj.)
Engine Warmup	5 Sec.-3 Min. (Adj.)
Return to Utility	1-30 Min. (Adj.)
Engine Cooldown	1-30 Min. (Adj.)
Standby Voltage	85-95% (Adj.)
Standby Frequency	80-90% (Adj.)
Time Delay Neutral	0.1-10 Sec. (Adj.)
Transfer on Exercise	On/Off Switch
Warmup Timer Bypass	On/Off Switch
Time Delay Neutral Bypass	On/Off Switch
Inphase Monitor	On/Off Switch

Withstand Current - 600 Volt GTS Series

GTS Rated Amps	100	150	200	300	400
FUSE PROTECTED					
Maximum RMS Symmetrical Fault Current – Amps	200,000	200,000	200,000	200,000	200,000
Maximum Fuse Size – Amps	200	400	400	600	600
Fuse Class	J,T	J,T	J,T	J,T	J,T
CIRCUIT BREAKER PROTECTED (See separate sheet for specific circuit breakers)					
Maximum RMS Symmetrical Fault Current – Amps	14,000	25,000	25,000	35,000	35,000
Protective Device Continuous Rating (Max) – Amps	150	300	300	600	600

- Tested in accordance with the withstand and closing requirements of UL 1008 and CSA Standards
- Current ratings are listed @ 480 VAC

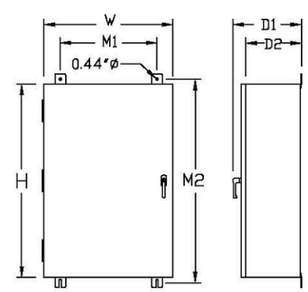

Unit Dimensions

GTS Rated Amps	Voltage	Enclosure Height H	Enclosure Width W	Wall Mount Bolt Pattern M1	Wall Mount Bolt Pattern M2	Enclsoure Depth D1	Enclsoure Depth D2	Weight (lbs.)
100	All	36	24	18	37.5	12.7	10	180
150-200	120/240	36	24	18	37.5	12.7	10	185
150-200	120/208	36	24	18	37.5	12.7	10	185
150-200	277/480	48*	30*	24	49.5	14.8	12	265
150-200	600	48*	30*	24	49.5	14.8	12	265
300-400	120/240	36	24	18	37.5	12.7	10	245
300-400	120/208	36	24	18	37.5	12.7	10	245
300-400	277/480	48*	30*	24	49.5	14.8	12	325
300-400	600	48*	30*	24	49.5	14.8	12	325

* Note: On NEMA 1 enclosures only, door overlaps enclosure – door dimensions are 48.8 H X 30.8 W. All dimensions in inches.

Terminal Lug Wire Ranges

GTS RATED AMPS	CONTACTOR TERMINALS (1 LUG PER POLE) LUG WIRE RANGE	NEUTRAL BAR* # LUGS	NEUTRAL BAR* LUG WIRE RANGE	GROUND LUG (1 PROVIDED) LUG WIRE RANGE
100	2/0 – 14 AWG	4	2/0 – 14 AWG	2/0 – 14 AWG
150	400MCM – 4 AWG	4	350MCM – 6 AWG	350MCM – 6 AWG
200	400MCM – 4 AWG	4	350MCM – 6 AWG	350MCM – 6 AWG
300	600MCM – 4 AWG or 2 – [250MCM – 1/0 AWG]	4	600MCM – 4 AWG [250MCM – 1/0 AWG]**	350MCM – 6 AWG 350MCM – 6 AWG
400	600MCM – 4 AWG or 2 – [250MCM – 1/0 AWG]	4	600MCM – 4 AWG [250MCM – 1/0 AWG]**	350MCM – 6 AWG

* Not included in GTS with switched neutral. ** Allowable wire range in brackets is for 2 wires per lug.

Generac Power Systems, Inc. • S45 W29290 HWY. 59, Waukesha, WI 53189 • generac.com

©2016 Generac Power Systems, Inc. All rights reserved. All specifications are subject to change without notice. Bulletin 0947000000S-C 03/21/16

T-Mobile

AMERICAN TOWER®

POWDER RIVER
Development Services, LLC

REVISIONS

REV	DATE	DESCRIPTION	INT
E	04/04/19	ISSUED FOR REVIEW 90%	MAB
D	05/23/18	ISSUED FOR REVIEW 90%	RJP
C	03/07/18	ISSUED FOR REVIEW 90%	TRT
B	02/07/17	ISSUED FOR REVIEW 90%	JPN
A	09/06/17	ISSUED FOR REVIEW 90%	JHT

PRELIMINARY
NOT FOR
CONSTRUCTION

THESE PLANS AND SPECIFICATIONS, AS INSTRUMENTS OF SERVICE, ARE AND SHALL REMAIN THE PROPERTY OF POWDER RIVER DEVELOPMENT SERVICES, LLC WHETHER THE PROJECTS FOR WHICH THEY ARE MADE ARE EXECUTED OR NOT. THESE DRAWINGS AND SPECIFICATIONS SHALL NOT BE USED BY ANY PERSON OR ENTITY ON OTHER PROJECTS WITHOUT PRIOR WRITTEN CONSENT OF THE ENGINEER.

SITE INFORMATION

T-MOBILE #: PO02600A

ATC #: 310444

184 RATTLESNAKE ROAD
CENTERVILLE, OREGON
98613

SHEET TITLE:
ATS SPECIFICATIONS

SHEET NUMBER:
C-6

THE INFORMATION CONTAINED IN THIS SET OF CONSTRUCTION DOCUMENTS IS PROPRIETARY BY NATURE. ANY USE OR DISCLOSURE OTHER THAN THAT WHICH RELATES TO CARRIER SERVICES IS STRICTLY PROHIBITED.

THIS VESSEL IS DESIGNED FOR THE STORAGE OF LIQUEFIED PETROLEUM GAS ONLY

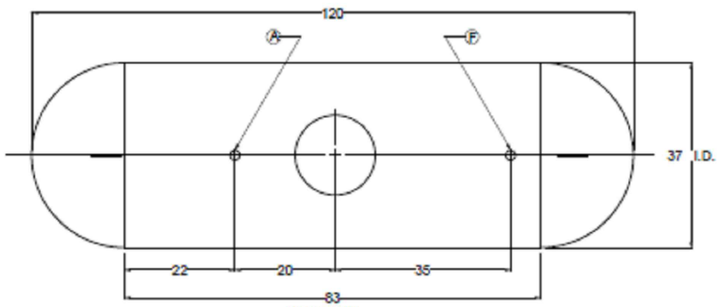

TOP VIEW

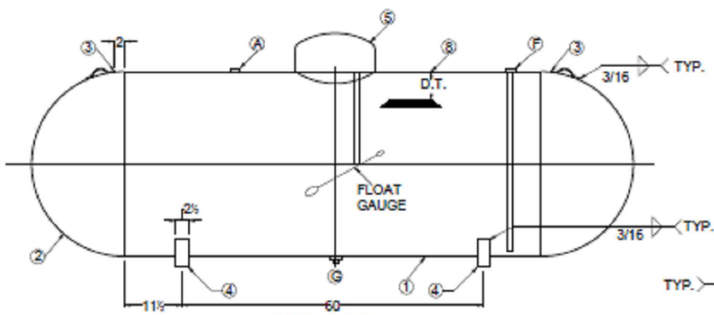

SIDE ELEVATION

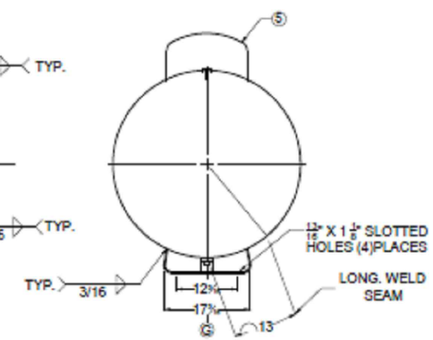

END VIEW

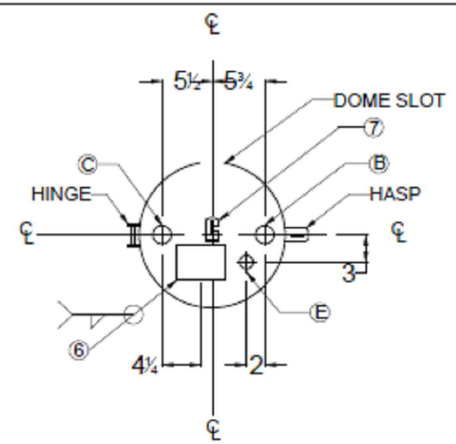

FITTING LAYOUT

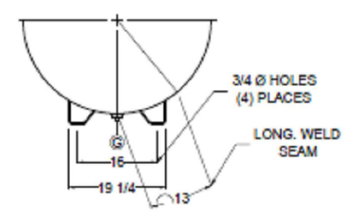

OPTIONAL TWO PEICE LEGS

NOTE: TANK MUST BE INSTALLED LEVEL, WITH ALL LEGS IN SAME PLANE TO ASSURE EVEN DISTRIBUTIONOF LOADS AND OPTIMIZE ACCURACY OF GAUGE DEVICE.

MARK	QTY.	SIZE	TYPE	FITTINGS REGO	FITTINGS SHERWOOD	SERVICE
A	1	1	XH FLG.	86840T	UVE443AM	RELIEF VALVE
B	1	1	XH FLG.	RCC34-0704 X 6867-27 OR SHERWOOD FG 3861-004K OR SQUIRE TAYLOR HATCHC		FLOAT GAUGE
C	1	1-1/4	XH FLG.	7579T	AFV10	FILL VALVE
E	1	3/4	XH FLG.	P7556RS 10.5	PVE2033DLDBT	MULTI VALVE
F	1	3/4	XH FLG W/ HVAC TUBE	7590UT	PVE5136	CHEK-LOK
F (OPT)	1	1 1/4	XH FLG W/ HVAC TUBE	7591UT	PVE5137	CHEK-LOK
G	1	1 1/4	XH FLG.			PLUGGED OPENING

MARK	QTY.	DESCRIPTION	DWG. NO.
1	1	SHELL- 0.218" X 83" X 116 13/16" - SA414G	
2	2	HEADS - 37" I.D. X 0.185" -HEMI: SA414C	
3	2	LIFTING LUGS	D - 2
4	4	TANK LEGS (SINGLE PIECE)	D - 3
4(ALT.)	2	TANK LEGS (TWO PIECE)	D - 2
5	1	DOME	D - 4
6	1	DATA PLATE	
7	1	REGULATOR BRACKET	D - 10
8	1	DIP TUBE LENGTH = 10.7" FOR 80 % @ 40° F	

PN: 0105211X

REV.	BY:	DESCRIPTION	DATE:
0	CDH	ORIGINAL ISSUE	3/18/03
1	CDH	CORRECTED RELIEF VLV. MODEL NOS.	11/5/03
2	CDH	CORRECTED SHELL LENGTH	11/12/03
3	RGA	REVISED COMPANY NAME	12/08/07
4	w/o	STANDARDIZE DRAWING	06/30/11
5	w/o	UPDATE NAME PLATE	08/07/12
6	bts	UPDATE NAME PLATE	01/10/14
7	bts	UPDATE SHELL LENGTH	03/18/14

SER. NO. *

CERTIFIED BY: QUALITY STEEL CORPORATION

CLEVELAND, MS • FREMONT, OHIO • WEST JORDAN, UTAH

ASME U W, RT4

MAX. ALLOW. WORK. PRESS. 250 PSI AT 400 °F.

M.D.M.T. -20 °F. AT 250 PSI

YEAR BUILT 201 CRN NO. L-4709.5C

SER. NO. *

LENGTH 120 IN. OUTSIDE DIA. 37.4 IN.

HEAD THK .185 IN. SHELL THK. .218 IN.

ABOVE GROUND TYPE BS-AP SURFACE AREA 98.2 SQ. FT.

UL LISTED CONTAINER ASSEMBLY FOR LP GAS 547P HEAD D.R. HEMI.

WATER CAPACITY 500 GALLONS

THIS CONTAINER SHALL NOT CONTAIN A PRODUCT HAVING A VAPOR PRESSURE IN EXCESS OF 215 PS AT 100°F. DIP TUBE LENGTH - 80% FULL AT 40°F. D.T.= 10.7 IN.

DATA PLATE DETAIL

GENERAL NOTES:

1. LIFTING LUGS DESIGNED FOR TOTAL LIFTING WEIGHT OF 1500#.
2. TOTAL EMPTY WEIGHT IS 949#.
3. ALL DIMENSIONS ARE IN INCHES UNLESS OTHERWISE SPECIFIED.
4. COMPLETE TANK DRIED TO REMOVE ALL MOISTURE.
5. ALL WEIGHTS AND CAPACITIES ARE APPROXIMATE
6. EXTERIOR OF TANK TO BE GRIT BLASTED.
7. PAINT PER SHOP ORDER.
8. VACUUM PURGE TANK.
9. DIMENSIONS ARE SUBJECT TO CHANGE WITH OUT NOTICE. (NON-PRESSURE RETAINING COMPONENTS ONLY)
10. THREADS OF ALL FITTINGS TO BE COATED WITH COMPOUND SUITABLE FOR USE WITH LP GAS.
11. FLOAT GAUGE TO BE INSTALLED WITH FLOAT ARM 45 ° OFF LONGITUDINAL CENTERLINE OF TANK.

GENERAL SPECIFICATIONS	
WATER CAPACITY (GALLONS)	500
ALLOWABLE WORKING PRESSURE (PSIG)	250
JOINT EFFICIENCY: ASME UW-51 LONG SEAM	100 %
ASME UW-52 HEAD TO SHELL	80 %
HYDROSTATIC TEST PRESSURE (PSIG)	325
SURFACE AREA (SQ. FT.)	98.2
RELIEF VALVE SETTING (PSIG)	250
RELIEF DISCHARGE RATE - (CFM REQ'D.)	2290
HEAT TREATMENT NOT REQUIRED	
CODE: ASME SECTION VIII DIV. I	
STANDARDS: UNDERWRITERS LABORATORIES INC.	MH-7203
N.F.P.A. 58 LP GAS CODE	
MATERIAL SPECS.: COUPLINGS SA-105	
TANK FLANGES SA-105	
ADAPTOR SA-105	

500 W.G. ABOVEGROUND PROPANE TANK-TYPE BS-AP

QUALITY STEEL CORPORATION

DATE:	DRAWN BY:	APPROVED BY:	REVISION:	DRAWING NO.:
03 / 18 / 03	CDH	CDH	7	E-500C9D

STANDARD AG WITH BOTTOM DRAIN

PROPANE TANK SPECIFICATIONS | SCALE: N.T.S. | 1

THE INFORMATION CONTAINED IN THIS SET OF CONSTRUCTION DOCUMENTS IS PROPRIETARY BY NATURE. ANY USE OR DISCLOSURE OTHER THAN THAT WHICH RELATES TO CARRIER SERVICES IS STRICTLY PROHIBITED.

T-Mobile

AMERICAN TOWER®

POWDER RIVER Development Services, LLC

REVISIONS

REV	DATE	DESCRIPTION	INT
E	04/04/19	ISSUED FOR REVIEW 90%	MAB
D	05/23/18	ISSUED FOR REVIEW 90%	RJP
C	03/07/18	ISSUED FOR REVIEW 90%	TRT
B	02/07/17	ISSUED FOR REVIEW 90%	JPN
A	09/06/17	ISSUED FOR REVIEW 90%	JHT

FOR REFERENCE ONLY

THESE PLANS AND SPECIFICATIONS, AS INSTRUMENTS OF SERVICE, ARE AND SHALL REMAIN THE PROPERTY OF POWDER RIVER DEVELOPMENT SERVICES, LLC WHETHER THE PROJECTS FOR WHICH THEY ARE MADE ARE EXECUTED OR NOT. THESE DRAWINGS AND SPECIFICATIONS SHALL NOT BE USED BY ANY PERSON OR ENTITY ON OTHER PROJECTS WITHOUT PRIOR WRITTEN CONSENT OF THE ENGINEER.

SITE INFORMATION

T-MOBILE #: PO02600A

ATC #: 310444

184 RATTLESNAKE ROAD CENTERVILLE, OREGON 98613

SHEET TITLE:

PROPANE TANK SPECIFICATIONS

SHEET NUMBER:

C-7

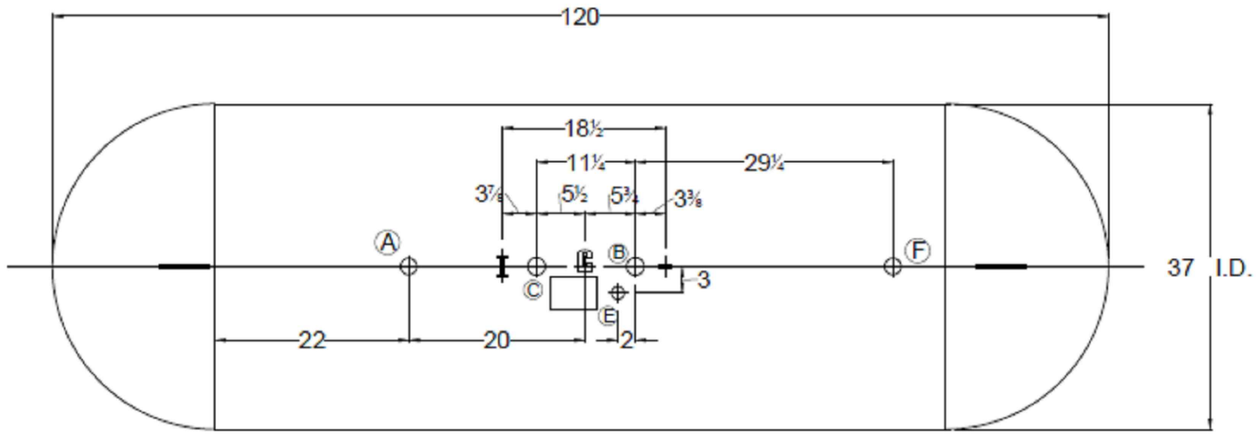

TOP VIEW

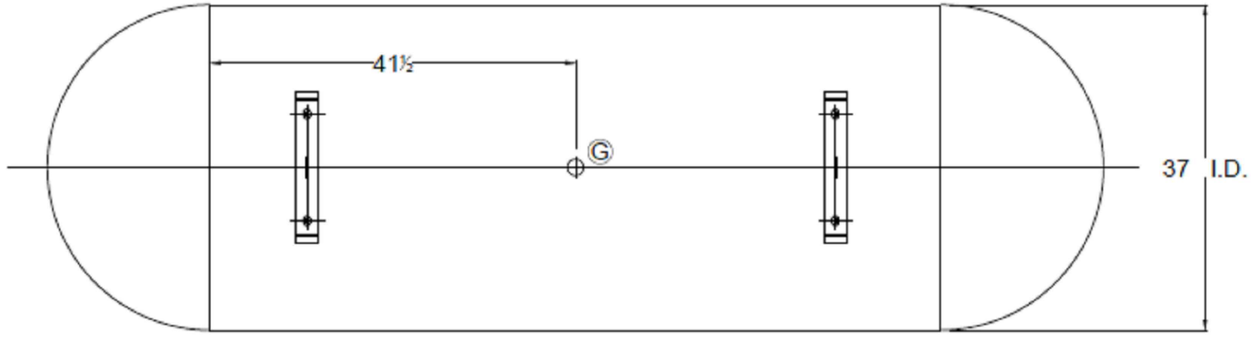

BOTTOM VIEW

MARK	QTY.	SIZE	HOLE DIA
A	1	1	1 13/16
B	1	1	1 13/16
C	1	1-1/4	2 1/16
E	1	3/4	1 9/16
F	1	3/4	1 9/16
F (OPT)	1	1 1/4	2 1/16
G	1	1-1/4	2 1/16

NOTE: SEE TANK DRAWING FOR REVISION BLOCK

500 W.G. ABOVEGROUND
PROPANE TANK-TYPE BS-AP

QUALITY STEEL CORPORATION
FITTINGS LAYOUT

DATE:	DRAWN BY:	APPROVED BY:	REVISION:	DRAWING No.:
03 / 18 / 03	CDH	CDH	7	E-500C9D

T-Mobile

AMERICAN TOWER®

POWDER RIVER
Development Services, LLC

REVISIONS

REV	DATE	DESCRIPTION	INT
E	04/04/19	ISSUED FOR REVIEW 90%	MAB
D	05/23/18	ISSUED FOR REVIEW 90%	RJP
C	03/07/18	ISSUED FOR REVIEW 90%	TRT
B	02/07/17	ISSUED FOR REVIEW 90%	JPN
A	09/06/17	ISSUED FOR REVIEW 90%	JHT

FOR REFERENCE ONLY

THESE PLANS AND SPECIFICATIONS, AS INSTRUMENTS OF SERVICE, ARE AND SHALL REMAIN THE PROPERTY OF POWDER RIVER DEVELOPMENT SERVICES, LLC WHETHER THE PROJECTS FOR WHICH THEY ARE MADE ARE EXECUTED OR NOT. THESE DRAWINGS AND SPECIFICATIONS SHALL NOT BE USED BY ANY PERSON OR ENTITY ON OTHER PROJECTS WITHOUT PRIOR WRITTEN CONSENT OF THE ENGINEER.

SITE INFORMATION

T-MOBILE #: PO02600A

ATC #: 310444

184 RATTLESNAKE ROAD
CENTERVILLE, OREGON
98613

SHEET TITLE:
PROPANE TANK SPECIFICATIONS

SHEET NUMBER:
C-8

PROPANE TANK SPECIFICATIONS | SCALE: N.T.S. | 1

THE INFORMATION CONTAINED IN THIS SET OF CONSTRUCTION DOCUMENTS IS PROPRIETARY BY NATURE. ANY USE OR DISCLOSURE OTHER THAN THAT WHICH RELATES TO CARRIER SERVICES IS STRICTLY PROHIBITED.

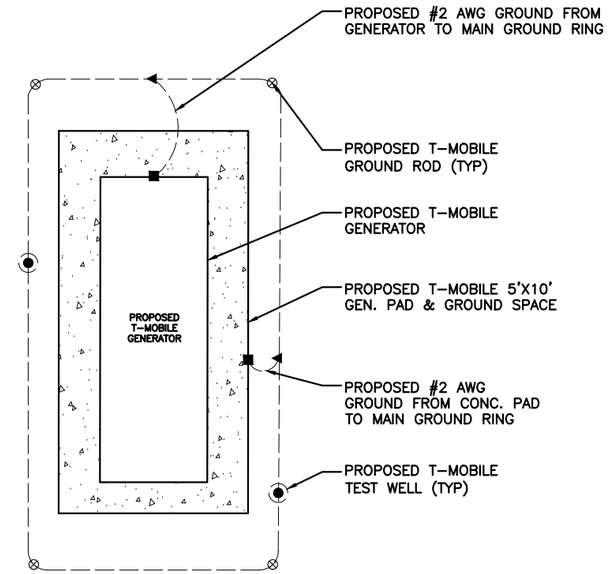

LEGEND:

------ EXISTING GROUND RING

▲ CADWELD CONNECTION (EXOTHERMIC WELD)

■ MECHANICAL CONNECTION

⊗ GROUND ROD

● TEST WELL

NOT USED | 2 | GROUNDING PLAN | SCALE: N.T.S. | 1

THE INFORMATION CONTAINED IN THIS SET OF CONSTRUCTION DOCUMENTS IS PROPRIETARY BY NATURE. ANY USE OR DISCLOSURE OTHER THAN THAT WHICH RELATES TO CARRIER SERVICES IS STRICTLY PROHIBITED.

T-Mobile

AMERICAN TOWER®

POWDER RIVER
Development Services, LLC

REVISIONS

REV	DATE	DESCRIPTION	INT
E	04/04/19	ISSUED FOR REVIEW 90%	MAB
D	05/23/18	ISSUED FOR REVIEW 90%	RJP
C	03/07/18	ISSUED FOR REVIEW 90%	TRT
B	02/07/17	ISSUED FOR REVIEW 90%	JPN
A	09/06/17	ISSUED FOR REVIEW 90%	JHT

PRELIMINARY
NOT FOR
CONSTRUCTION

THESE PLANS AND SPECIFICATIONS, AS INSTRUMENTS OF SERVICE, ARE AND SHALL REMAIN THE PROPERTY OF POWDER RIVER DEVELOPMENT SERVICES, LLC WHETHER THE PROJECTS FOR WHICH THEY ARE MADE ARE EXECUTED OR NOT. THESE DRAWINGS AND SPECIFICATIONS SHALL NOT BE USED BY ANY PERSON OR ENTITY ON OTHER PROJECTS WITHOUT PRIOR WRITTEN CONSENT OF THE ENGINEER.

SITE INFORMATION

T-MOBILE #: PO02600A

ATC #: 310444

184 RATTLESNAKE ROAD
CENTERVILLE, OREGON
98613

SHEET TITLE:

GROUNDING DETAILS

SHEET NUMBER:

G-1

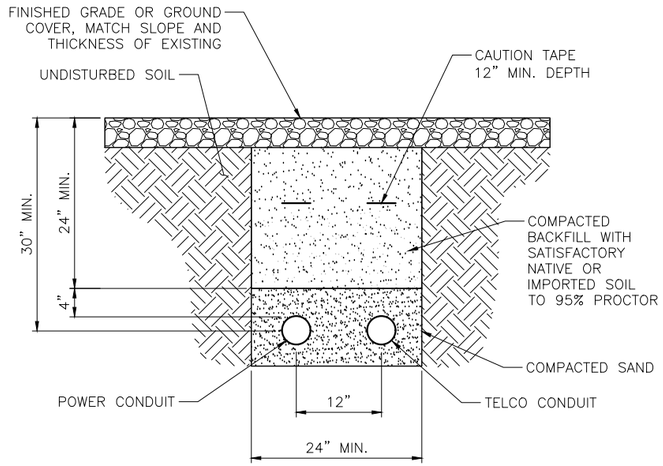

NOTES:

1. LEAN CONCRETE, RED-COLORED TOP, MAY BE USED IN PLACE OF COMPACTED SAND.
2. IF POWER AND TELCO ARE PLACED IN THE SAME TRENCH, PER NEC CODE, A MINIMUM OF 12" SEPARATION IS REQUIRED BETWEEN THE POWER AND FIBER CONDUIT.

CONDUIT TRENCH DETAIL | SCALE: N.T.S. | 3

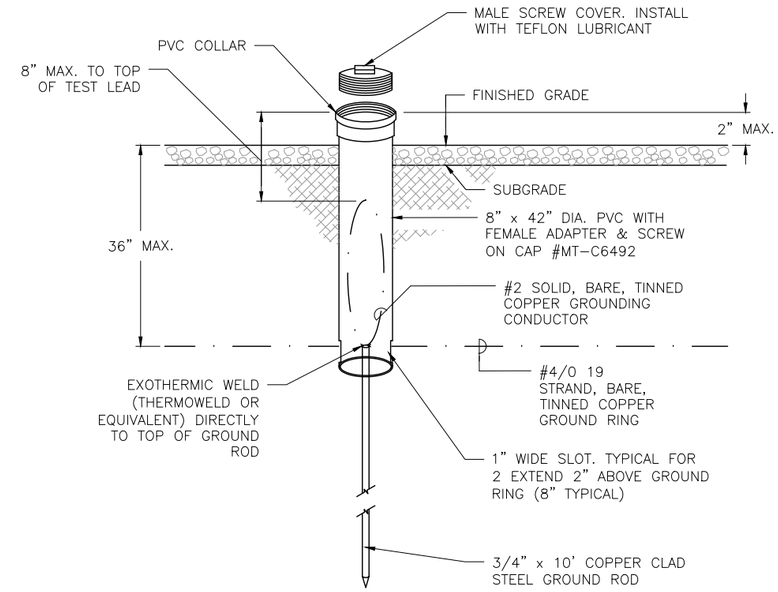

TEST WELL DETAIL | SCALE: N.T.S. | 1

NOTES:

1. SEPARATION DIMENSION TO BE VERIFIED WITH LOCAL UTILITY COMPANY REQUIREMENTS.
2. COORDINATE UTILITY, LOCATE BEFORE DIGGING.
3. CONDUIT TRENCHING DEPTHS AT 36" OR 6" BELOW FROST LINE, WHICHEVER IS GREATER.
4. ALL RING AND RADIAL DEPTHS AT 30" OR 6" BELOW FROST LINE, WHICHEVER IS GREATER.
5. WELD GROUND TO FENCE AS LOW AS POSSIBLE TO DETER COPPER THEFT.

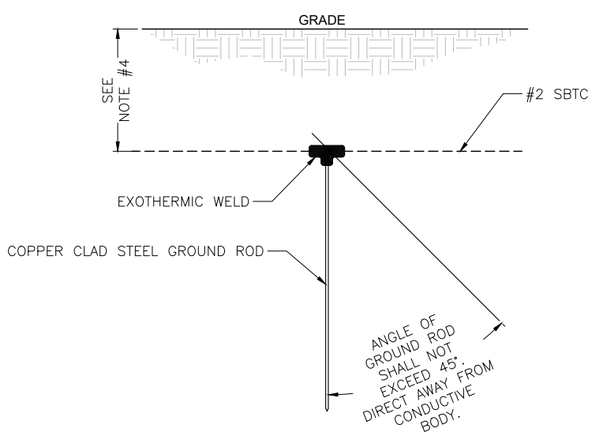

GROUND ROD DETAIL | SCALE: N.T.S. | 4

NOTE:
CADWELD "TYPES" SHOWN ARE EXAMPLES. CONSULT WITH CONSTRUCTION MANAGER FOR SPECIFIC TYPES OF CADWELDS TO BE USED FOR THIS PROJECT.

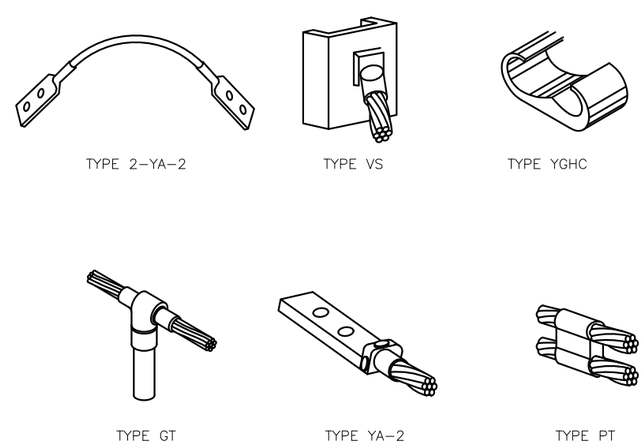

CADWELD CONNECTION TYPES | SCALE: N.T.S. | 2

T-Mobile

AMERICAN TOWER®

POWDER RIVER
Development Services, LLC

REVISIONS

REV	DATE	DESCRIPTION	INT
E	04/04/19	ISSUED FOR REVIEW 90%	MAB
D	05/23/18	ISSUED FOR REVIEW 90%	RJP
C	03/07/18	ISSUED FOR REVIEW 90%	TRT
B	02/07/17	ISSUED FOR REVIEW 90%	JPN
A	09/06/17	ISSUED FOR REVIEW 90%	JHT

PRELIMINARY
NOT FOR
CONSTRUCTION

THESE PLANS AND SPECIFICATIONS, AS INSTRUMENTS OF SERVICE, ARE AND SHALL REMAIN THE PROPERTY OF POWDER RIVER DEVELOPMENT SERVICES, LLC WHETHER THE PROJECTS FOR WHICH THEY ARE MADE ARE EXECUTED OR NOT. THESE DRAWINGS AND SPECIFICATIONS SHALL NOT BE USED BY ANY PERSON OR ENTITY ON OTHER PROJECTS WITHOUT PRIOR WRITTEN CONSENT OF THE ENGINEER.

SITE INFORMATION

T-MOBILE #: PO02600A

ATC #: 310444

184 RATTLESNAKE ROAD
CENTERVILLE, OREGON
98613

SHEET TITLE:
GROUNDING DETAILS

SHEET NUMBER:
G-2

THE INFORMATION CONTAINED IN THIS SET OF CONSTRUCTION DOCUMENTS IS PROPRIETARY BY NATURE. ANY USE OR DISCLOSURE OTHER THAN THAT WHICH RELATES TO CARRIER SERVICES IS STRICTLY PROHIBITED.