Land Use Application

Applicant(s): Owen Nason, Powder River Development Services for American Tower Corp.

Property Owner(s): Scott Alan Hall & Wendy D. Jaekel-Hall

Mailing Address: 408 S Eagle Rd. Ste 200., Eagle, ID 83616

Mailing Address: 9650 State Rt. 14, Goldendale, WA 98620

Phone: (208) 501-7049

Phone: (563) 726-2675

Email: owen.nason@powderriverdev.com

Email: jessica.verre@americantower.com

Location of property:

Township: 2N

Range: 15E

Parcel address: 02150300000600 184 Rattlesnake RD, Centerville, WA

Section & Qtr. Section: 3 1/4

County: Klickitat

Tax Lot No(s).: 800

Parcel Size (acres): .92

Existing use of parcel: wireless communications

Use of adjacent parcels: Open space, additional wireless communications facilities

Project description: This should include all proposed activities and details on size, height, exterior colors, and construction materials of proposed structures. Any areas of ground disturbance and landscaping details should also be described. It is important to describe all aspects of your project so that you may gain approval for all of the development activities you plan to do.

AT ANTENNA LEVEL, REMOVE (3) ANTENNAS AND INSTALL (3) ANTENNAS, (1) HYBRID CABLE, (1) COVP, (3) AHLOAS AND (1) ANGLE IRON FOR CABLE MANAGEMENT.
RELOCATE (2) FXFC FROM GROUND LEVEL TO TOWER.
AT GROUND LEVEL, REMOVE (1) ESMB, (1) FBBC, (1) ULTRASITE CABINET AND (3) FRLB AND INSTALL (1) FULL ICE CANOPY OVER EXISTING PAD, (2) AMOB, (1) ASIA, (2) ABIA, (1) ABIL, (1) ASIK AND (2) FCOA CABINET.
INSTALL (5) RECTIFIERS TO SSC AND UPGRADE ROUTER.
INSTALL LED LIGHTS

The new antennas will be off-white in color and dimensions HxWxD 95.9" X 25.2" X 9.3". A depiction is found on Sheet C-4

The new Nokia AHLOA units will be off-white in color and dimensions HxWxD 28.74" X 15.35" X 9.44". See depiction on Sheet C-5

The new Raycap COVP will be off-white in color and dimensions HxWxD 18.86" x 20.38" x 5.83"A depiction can be found on Sheet C-4

The relocated Nokia Flexi-Radio FXFC will be dark grey in color and dimensions HxWxD 5.2" x 19.4" x 22.1". See Sheet G-1

The proposed ice canopy over the existing concrete pad is 10' 6"H x 10'W x 15' L. See sheet C-1.1

One Ultrasite cabinet will be removed from the concrete pad and be replaced with a FCOA cabinet. Dimensions HxWxD 76.38" x 30.3" x 30.3". The cabinet is grey in color and depicted on Sheet C-6.

LED worklights are located near the cabinets and will only be turned on and off with a switch when maintenance work needs to be performed.

No ground disturbance or changes to the site's existing landscaping elements is proposed.

Application checklist: The following is required to complete your application:

- ☒ Application form completed and signed
- ☒ Site plan
- ☒ Key viewing areas checklist, elevation drawings, and landscape details, if required
- ☒ Names and addresses of adjacent property owners, if required
- ☒ Any additional information as required

Signature of the property owner(s) indicates that the property owner(s) is/are aware that an application is being made on the subject property. **Signature of the property owner(s) also authorizes the Gorge Commission or the Commission's designee(s) reasonable access to the site in order to evaluate the application.**

Applicant(s) signature: _____ date _____

_____ date _____

Property owner(s) signature: _____ Scott Alan Hall date 4-11-10

_____ Wendy D. Jaekel-Hall date 4-11-10

Site Plan

A plan drawn in black ink at a scale of 1 inch equals 200 feet (1:2400) or at a scale providing greater detail must be included with the application.

If the parcel is very large, you may show on the portion of the parcel affected by the proposed use. Be sure, however, to show enough of the parcel or some adjacent features, such as roads, so that the planners can orient themselves on your map. A small vicinity map showing the subject parcel and surrounding parcels may help.

At a minimum, you must show the following features; other site plan information may be required depending on the type or location of development being proposed.

- ☒ applicant(s) name
- ☒ location and width of existing and proposed roads, driveways, and trails
- ☒ scale and north arrow
- ☒ location and size of all existing and proposed structures
- ☒ boundaries of parcel with dimensions and size
- ☒ location of existing and proposed services including wells or other water supplies, sewage disposal systems, power and telephone poles and lines and outdoor lighting
- ☒ significant terrain features or landforms
- ☒ location and depth of all proposed grading and ditching
  groupings and species of trees or other vegetation on the parcel
- ☐ N/A location and species of vegetation that would be removed or planted
- ☐ N/A bodies of water and water courses

***Please use this template or attach a separate site plan**

Site plan (continued): See enclosed survey and Site Plan on Sheet C-1 for details

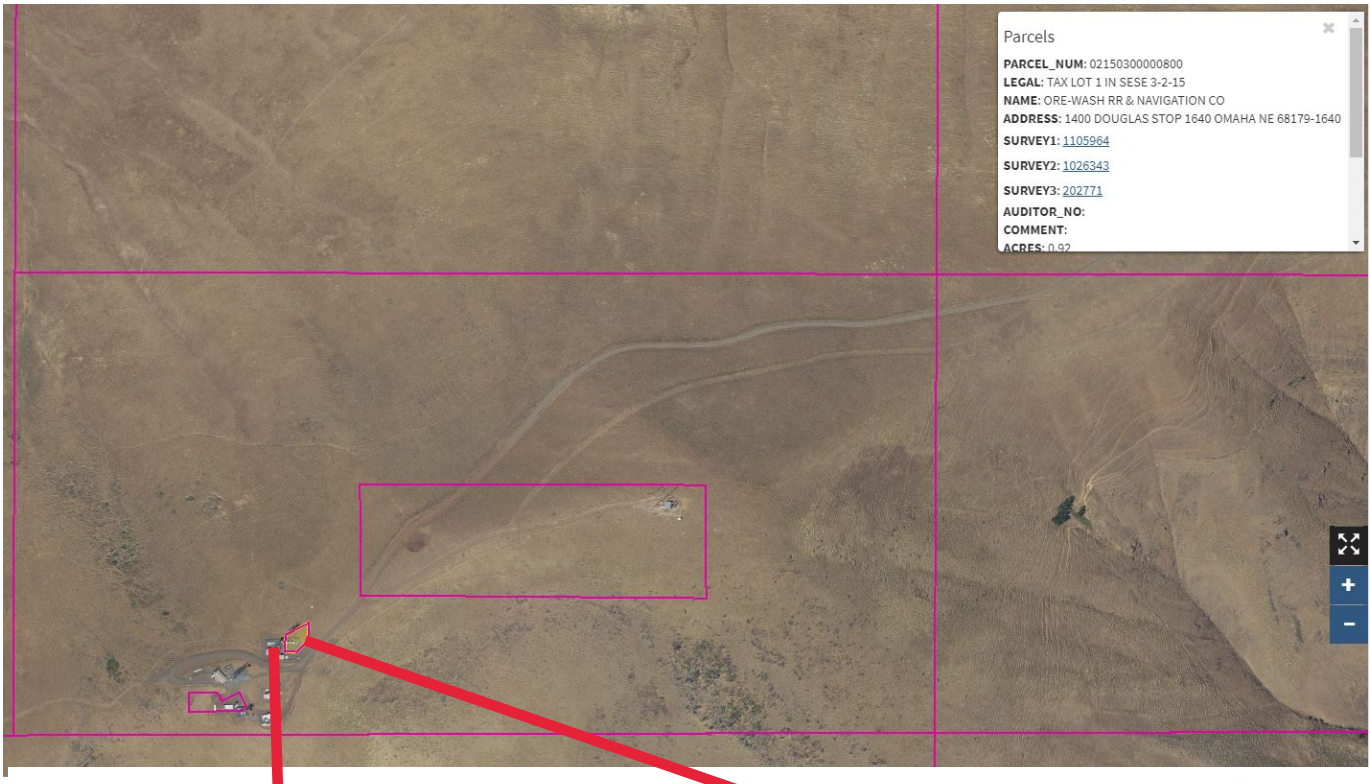

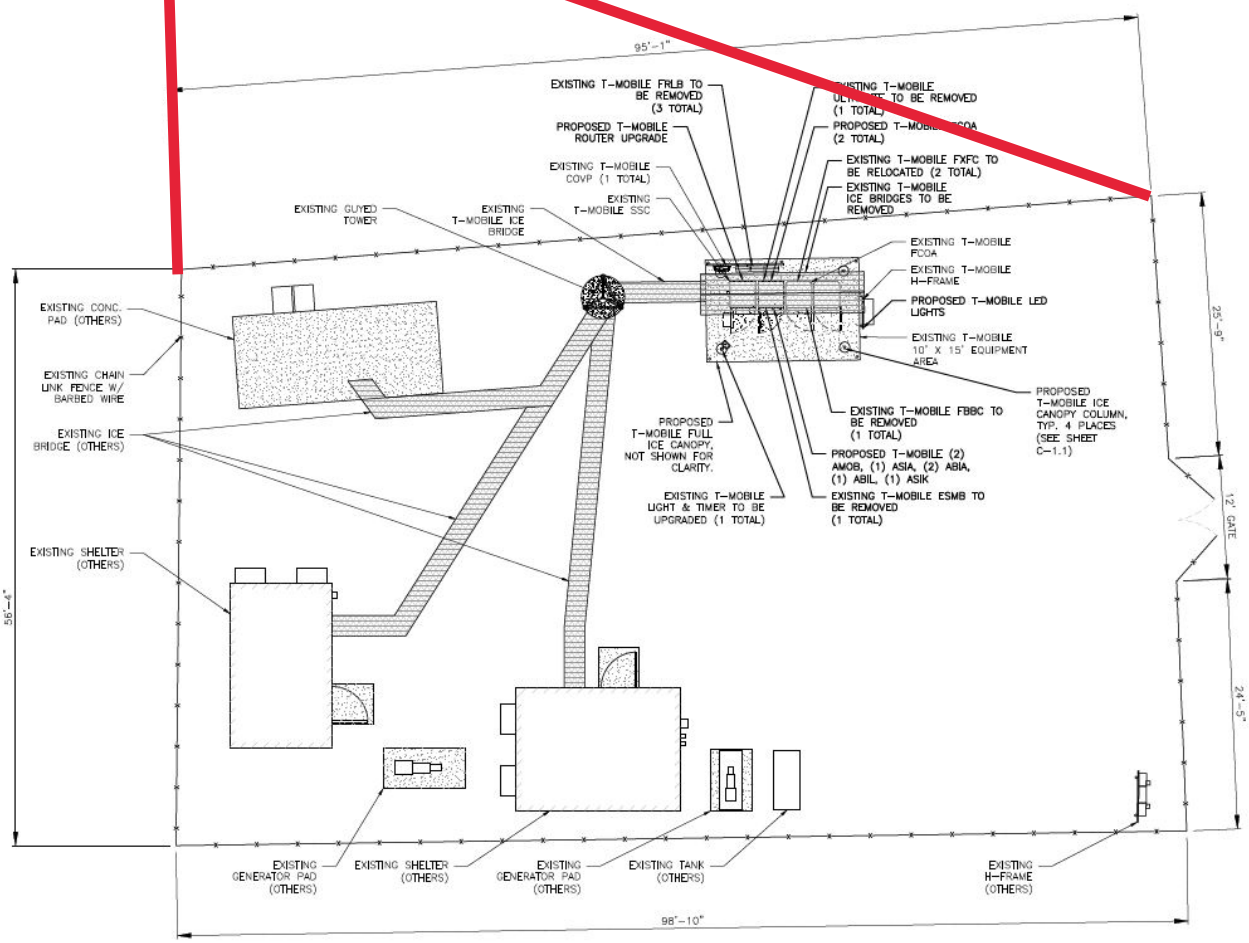

Key Viewing Areas:

Key viewing areas are important public viewpoints and areas that afford opportunities to view the Gorge scenery. Key viewing areas are listed below.

Please check those sites which can be seen from your property:

- ☐ Historic Columbia River Highway
- ☐ Old Highway 8 (County Road 1230)
- ☐ Highway I-84
- ☐ Washington State Route 142
- ☐ Washington State Route 14
- ☐ Washington State Route 141
- ☐ Panorama Point Park
- ☐ Columbia River
- ☐ Rowena Plateau and Nature Conservancy Viewpoint
- ☐ Cook-Underwood Road

Site not visible from any of the locations listed to the left

If your project would be visible from one or more key viewing areas, then you must submit elevation drawings and landscaping details.

Elevation drawings must show the sides of proposed buildings which would be visible from key viewing areas, including:

- ☐ *the appearance of proposed* buildings *over 400 square feet* in *size*
- ☐ *surrounding final grades*

N/A site not visible from key viewing areas

Landscape details must show how your project will be screened from key viewing areas, including:

- ☐ *location of plants used*
- ☐ *number of plants*
- ☐ *size of plants*
- ☐ *type of plants*
- ☐ *irrigation provisions or other measures to ensure the survival of landscaping planted for screening purposes*
- ☐ *location of existing and proposed topographical features which would screen your project.*

Adjacent Property Owners:

If your project is included in one of the categories below, then you must submit names and address of adjacent property owners within a specified distance (200 feet or 500 feet) of the perimeter of your parcel. The following list specifies the distance within which property owners must be notified of your proposal. You only need to provide the names and address (along with the parcel number); the Commission will send the notice.

Your county Assessor's Office can assist you in obtaining this property owner information. You may use the back of this form to record the names and addresses or you may submit forms which the county may provide you.

Notification of landowners within 200 feet:

- ☐ Uses within Residential designation (except single-family dwellings located adjacent to Agriculture or Forest designations - see notification of landowners within 500 feet)
- ☐ Uses within Agriculture designation (except non-farm single-family dwellings in Large-Scale Agriculture designation - see notification of landowners within 500 feet)
- ☐ Uses within Forest designation (except utility facilities, railroads, home occupations, cottage industries, wineries, agriculture product processing and packaging, mineral resources, geothermal resources, aquaculture, boarding of horses, temporary asphalt/batch plants, expansion of non-profit camps-retreats-conference centers, bed and breakfasts, and non-profit learning/research facilities - see notification of landowners within 500 feet)
- ☐ Uses within Commercial designations
- ☐ Uses within Recreation designations
- ☐ Uses within Open Space designations
- ☐ Uses within Agriculture-Special designations
- ☐ Uses within Special Management Areas

Notification of landowners within 500 feet:

- ☐ Single-family dwellings within Residential designation located adjacent to Agriculture or Forest designations
- ☐ Non-farm single-family dwellings within Large-Scale Agriculture designation
- ☐ Utility facilities, railroad, home occupations, wineries, agriculture product processing and packaging, mineral resources, geothermal resources, aquaculture, boarding of horses, temporary asphalt/batch plants, expansion of nonprofit camps/retreats/conference centers, and bed and breakfasts, non-profit learning/research facilities within Forest designations

Adjacent property owners (continued):

Township, Range, Section, Tax Lot Number	Name, Address, and E-mail (if possible)
T2N, R15E, S3 02150300009900	Bonneville Powder Administration ; 5240 Trosper ST SW, Olympia, WA 98512
T2N, R15E, S10 02150300000700	PUD #1 of Klickitat County ; 1313 S Columbus, Goldendale, WA 98620
T2N, R15E, S3 02150300000600	Scott, Hall ; 9650 HWY 14, Goldendale, WA 98620

Projects Requiring Grading Plans:

If your project meets one of the following, then you must submit a grading plan:

In the General Management Area:

N/A

- applications for structural development involving more than 100 total cubic yards of grading (material excavated and/or used as fill) with slopes of more than 10%;
- applications for structural development involving more than 200 total cubic yards of grading (material excavated and/or used as fill) where the building site is visible from one or more Key Viewing Areas

In the Special Management Area:

- applications for structural development involving more than 100 total cubic yards of grading (material excavated and/or used as fill) with slopes of more than 10% (except trails)

The grading plan must include the following:

- ☐ A map of the site prepared at a scale of 1 inch equals 200, feet (1:2;400) or at a scale providing greater detail, with contour intervals of at least every five feet including:
  - Existing and proposed final grades
  - Location of all areas to be graded, with cut banks and fill slopes delineated; and,
  - Estimated dimensions of graded areas.

- ☐ A narrative description of the proposed grading activity, including:
  - Its purpose
  - An estimate of the total volume of material to be moved
  - The height of all cut banks and fill slopes
  - Provisions to be used for compaction, drainage, and stabilization of graded areas (preparation of this information by a licensed engineer of geologist is recommended)
  - A description of all plant materials used to revegetate exposed slopes and banks, including types of species, number of, size and location of plants, and a description of irrigation provisions or other measures necessary to ensure the survival of plantings; and
  - A description of any interim or permanent erosion control measures to be utilized.

Please note: Structural development on slopes greater than 30% is prohibited.

If your project is listed below, you will also need to submit additional information. Contact a Gorge Commission planner for help in identifying the information required.

Projects in the General Management Area:

- ☐ Agricultural Buildings and Agricultural Labor Housing
- ☐ Projects within 1000 feet of sensitive wildlife and plant sites or water resources
- ☐ Single-family dwellings on lands designated Large or Small Woodland
- ☐ Single-family dwellings in conjunction with agricultural use
- ☐ Single-family dwellings not in conjunction with agricultural use (on Large-Scale Agriculture)
- ☐ Single-family dwelling for an Agricultural Operator's Relative
- ☐ Wineries or tasting rooms
- ☐ Temporary Hardship Dwelling
- ☐ N/A Communications and Utility Facilities on lands visible from key viewing areas
- ☐ New livestock grazing; new fences, livestock watering facilities, and corrals; or soil, water, and vegetation conservation activities on lands designated Agriculture-Special
- ☐ Production and/or development of mineral resources and expansion of existing quarries
- ☐ Uses located in or providing recreational access to the Columbia River or its tributaries

Site is not viewable from viewpoint locations

Projects in the Special Management Area:

- ☐ Single-family dwellings on lands designated Forest, Agriculture or Public Recreation
- ☐ Agricultural Buildings and Agricultural Labor Housing
- ☐ Clearing trees for new agricultural use
- ☐ Any new use or development on lands designated Open Space

Projects Requiring Cultural Resources Reconnaissance Surveys and Historic Surveys for Large-Scale Uses:

- ☐ Residential development of two or more dwellings
- ☐ Recreation facilities
- ☐ Commercial or industrial development
- ☐ Public transportation facilities
- ☐ Electric facilities, lines, equipment, and appurtenances that are 33 kilovolts or greater
- ☐ Communication, water and sewer, and natural gas transmission lines, pipes, equipment, and appurtenances

Projects Requiring Sensitive Plant and Wildlife Surveys:

- ☐ Land divisions that create four or more parcels
- ☐ Recreation facilities that contain parking areas for 10 cars, overnight camping facilities, boat ramps, and visitor information and environmental education facilities
- ☐ Public transportation facilities that are outside improved rights-of-way
- ☐ Electric facilities, lines, equipment, and appurtenances that are 33 kilovolts or greater
- ☐ Communication, water and sewer, and natural gas transmission lines, pipes, equipment, and appurtenances (except minor projects as specified in Commission Rule 350-81)

Please contact the Columbia River Gorge Commission's office if you need assistance or have any questions. The Commission recommends scheduling a pre-application meeting to discuss your project with a planner before submitting your application for review. Please call 509-493-3323 or contact us via our website at www.gorgecommission.org.

T··Mobile·

ATC ASSET #:
310444

SITE NAME:
HAYSTACK BUTTE

SITE NUMBER:
PO02600A

FILE NAME:
310444_PO02600A_L600_FCD_REV 0_08132018

LOCATION:
184 RATTLESNAKE RD., CENTERVILLE, WA 98613

45° 40' 48.978", -120° 54' 48.786"

104' GUYED TOWER
L600

SITE INFORMATION

TOWER MANAGER:	AMERICAN TOWER 10 PRESIDENTIAL WAY WOBURN, MA 01801
SITE ADDRESS:	184 RATTLESNAKE RD. CENTERVILLE, WA 98613
COUNTY:	KLICKITAT
LATITUDE:	45° 40' 48.978"
LONGITUDE:	-120° 54' 48.786"
GROUND ELEVATION:	2950' AMSL
OCCUPANCY TYPE:	UNMANNED
ZONING JURISDICTION:	KLICKITAT COUNTY
ZONING CODE:	OPEN SPACE
PARCEL NUMBER:	02-15-0300-0006
POWER PROVIDER:	KLICKITAT PUD
TELCO PROVIDER:	KLICKITAT PUD

CONTACT INFORMATION

A&E SERVICES:
POWDER RIVER ENGINEERING SERVICES, LLC.
408 S. EAGLE ROAD, SUITE 200
EAGLE, ID 83616
CONTACT: TODD HILL
PHONE: 406.595.2233
EMAIL: todd.hill@powderriverdev.com

SITE ACQUISITION:
POWDER RIVER DEVELOPMENT SERVICES, LLC.
408 S. EAGLE ROAD, SUITE 200
EAGLE, ID 83616
CONTACT: OWEN NASON
PHONE: 208.938.8844
EMAIL: owen.nason@powderriverdev.com

APPLICANT:
T-MOBILE WEST LLC
3625 132ND AVE SE
BELLEVUE, WA 98006
CONTACT:
PHONE:
EMAIL:

TOWER CONTACT:
AMERICAN TOWER
10 PRESIDENTIAL WAY
WOBURN, MA 01801
CONTACT: JESSICA VERRE
PHONE: 563.726.2675
EMAIL: jessica.verre@americantower.com

VICINITY MAP

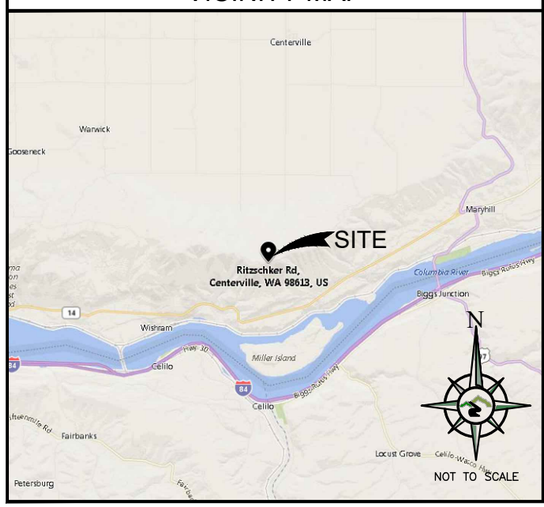

SITE PHOTO

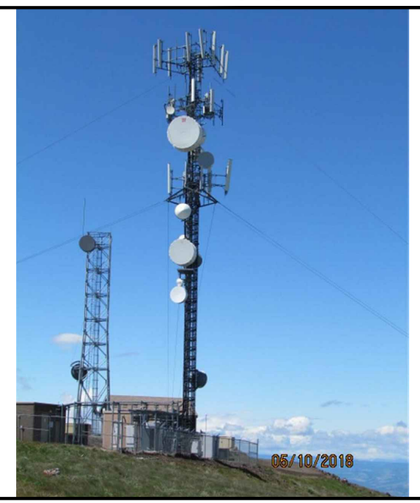

DRIVING DIRECTIONS

DIRECTIONS FROM PORTLAND INTERNATIONAL AIRPORT:

DEPART AIRPORT TOWARD NE AIRPORT WAY. BEAR LEFT ONTO NE AIRPORT WAY. TAKE RAMP RIGHT FOR I-205 SOUTH TOWARD PORTLAND / SALEM. AT EXIT 22, TAKE RAMP RIGHT FOR I-84 EAST / US-30 EAST TOWARD THE DALLES. AT EXIT 104, TAKE RAMP RIGHT FOR US-97 TOWARD BEND / YAKIMA. TURN LEFT ONTO US-97. TURN RIGHT TO STAY ON US-97. TURN LEFT ONTO SPUR RD. TURN LEFT ONTO STRINGSTREET RD. TURN LEFT ONTO DOOLEY RD. TURN LEFT ONTO HAYSTACK BUTTE RD. ARRIVE AT RITZSCHKER RD ON THE RIGHT.

APPLICABLE CODES

BUILDING CODE 2015 IBC
ELECTRICAL CODE 2014 NEC

DRAWING INDEX

SHEET NO.	DESCRIPTION	REV
T-1	TITLE SHEET	0
GN-1	GENERAL NOTES	0
GN-2	GENERAL NOTES	0
GN-3	GENERAL NOTES	0
GN-4	GENERAL NOTES	0
C-1	SITE PLAN	0
C-1.1	ICE CANOPY DETAILS	0
C-2	ELEVATIONS	0
C-3	ANTENNA PLANS	0
C-3.1	RFDS & CABLE SPECIFICATIONS	0
C-4	EQUIPMENT DETAILS	0
C-5	EQUIPMENT DETAILS	0
C-6	EQUIPMENT DETAILS	0
G-1	GROUNDING PLANS	0
G-2	GROUNDING DETAILS	0

SCOPE OF WORK

RFDS VERSION 3.2 6/11/18

AT ANTENNA LEVEL, REMOVE (3) ANTENNAS AND INSTALL (3) ANTENNAS, (1) HYBRID CABLE, (1) COVP, (3) AHLOAS AND (1) ANGLE IRON FOR CABLE MANAGEMENT.
RELOCATE (2) FXFC FROM GROUND LEVEL TO TOWER.
AT GROUND LEVEL, REMOVE (1) ESMB, (1) FBBC, (1) ULTRASITE CABINET AND (3) FRLB AND INSTALL (1) FULL ICE CANOPY OVER EXISTING PAD, (2) AMOB, (1) ASIA, (2) ABIA, (1) ABIL, (1) ASIK AND (2) FCOA CABINET.
INSTALL (5) RECTIFIERS TO SSC AND UPGRADE ROUTER.
INSTALL LED LIGHTS

T··Mobile·

AMERICAN TOWER®

POWDER RIVER
Engineering Services, LLC
www.powderriverdev.com

BUSINESS LICENSE #: 3004

REVISIONS

REV	DATE	DESCRIPTION	INT
0	08/13/18	100% CONSTRUCTION	JPN
A	06/14/18	ISSUED FOR REVIEW 90%	SDA

8813
REGISTERED ARCHITECT
GLENN WALKER
STATE OF WASHINGTON
08/13/18

THESE PLANS AND SPECIFICATIONS, AS INSTRUMENTS OF SERVICE, ARE AND SHALL REMAIN THE PROPERTY OF POWDER RIVER DEVELOPMENT SERVICES, LLC WHETHER THE PROJECTS FOR WHICH THEY ARE MADE ARE EXECUTED OR NOT. THESE DRAWINGS AND SPECIFICATIONS SHALL NOT BE USED BY ANY PERSON OR ENTITY ON OTHER PROJECTS WITHOUT PRIOR WRITTEN CONSENT OF THE ENGINEER.

SITE INFORMATION

T-MOBILE #: PO02600A

ATC #: 310444

**184 RATTLESNAKE RD.
CENTERVILLE, WA
98613**

SHEET TITLE:

TITLE SHEET

SHEET NUMBER:

T-1

THE INFORMATION CONTAINED IN THIS SET OF CONSTRUCTION DOCUMENTS IS PROPRIETARY BY NATURE. ANY USE OR DISCLOSURE OTHER THAN THAT WHICH RELATES TO CARRIER SERVICES IS STRICTLY PROHIBITED.

GENERAL NOTES

1. GENERAL NOTES AND TYPICAL DETAILS SHALL APPLY TO ALL PARTS OF THE JOB EXCEPT WHERE THEY MAY CONFLICT WITH DETAILS AND NOTES ON OTHER SHEETS. WHERE CONDITIONS ARE NOT SPECIFICALLY INDICATED BUT ARE OF SIMILAR CHARACTER TO DETAILS SHOWN, SIMILAR DETAILS OF CONSTRUCTION SHALL BE USED SUBJECT TO REVIEW BY THE ENGINEER.
2. WORK SHALL CONFORM TO THE REQUIREMENTS, AS AMENDED TO DATE, OF THE LATEST EDITION OF THE BUILDING CODE AND ALL OTHER LOCAL, STATE AND FEDERAL REGULATIONS.
3. OMISSIONS OR CONFLICTS BETWEEN THE VARIOUS ELEMENTS OF THE WORKING DRAWINGS AND/OR SPECIFICATIONS SHALL BE BROUGHT TO THE ATTENTION OF THE ENGINEER PRIOR TO PROCEEDING WITH ANY WORK INVOLVED.
4. ALL INFORMATION SHOWN ON THE DRAWINGS RELATIVE TO EXISTING CONDITIONS IS GIVEN AS THE BEST PRESENT KNOWLEDGE, BUT WITHOUT GUARANTEE OF ACCURACY. WHERE ACTUAL CONDITIONS CONFLICT WITH THE DRAWINGS, THEY SHALL BE REPORTED OT THE ENGINEER SO THAT THE PROPER REVISION MAY BE MADE. MODIFICATIONS OF CONSTRUCTION DETAILS SHALL NOT BE MADE WITHOUT THE WRITTEN APPROVAL OF THE ENGINEER.
5. THE CONSTRUCTION DRAWINGS AND SPECIFICATIONS REPRESENT THE FINISHED STRUCTURE AND DO NOT INDICATE THE METHOD OF CONSTRUCTION. THE CONTRACTOR SHALL SUPERVISE AND DIRECT THE WORK AND SHALL BE SOLELY RESPONSIBLE FOR CONSTRUCTION MEANS, METHODS, TECHNIQUES, SEQUENCES AND PROCEDURES, INCLUDING BUT NOT LIMITED TO BRACING, TEMPORARY SUPPORTS AND SHORING. OBSERVATION VISITS TO THE SITE BY FIELD REPRESENTATIVES OF THE ENGINEER SHALL NOT INCLUDE INSPECTIONS OF THE PROTECTIVE MEASURES OR THE CONSTRUCTION PROCEDURES. ANY SUPPORT SERVICES PERFORMED BY THE ENGINEER DURING THE CONSTRUCTION SHALL BE DISTINGUISHED FROM CONSTRUCTION AND DETAILED INSPECTION SERVICES WHICH ARE FURNISHED BY OTHERS. THESE SUPPORT SERVICES PERFORMED BY THE ENGINEER, WHETHER OF MATERIAL OR WORK, ARE FOR THE PURPOSE OF ASSISTING IN QUALITY CONTROL AND IN ACHIEVING CONFORMANCE WITH CONTRACT DOCUMENTS, BUT DO NOT GUARANTEE CONTRACTORS PERFORMANCE AND SHALL NOT BE CONSTRUED AS SUPERVISION OF CONSTRUCTION. CONTRACTOR SHALL TAKE NECESSARY PRECAUTIONS TO MAINTAIN AND ENSURE THE INTEGRITY OF THE STRUCTURE DURING CONSTRUCTION. NEITHER THE OWNER NOR ENGINEER WILL ENFORCE SAFETY MEASURES OR REGULATIONS. CONTRACTOR SHALL DESIGN, CONSTRUCT AND MAINTAIN ALL SAFETY DEVICES, INCLUDING SHORING AND BRACING, AND SHALL BE SOLELY RESPONSIBLE FOR CONFORMING TO ALL LOCAL, STATE AND FEDERAL SAFETY AND HEALTH STANDARDS, LAWS AND REGULATIONS.
6. SAFETY: CONFORM TO ALL APPLICABLE OSHA CONSTRUCTION SAFETY REGULATIONS FOR ALL WORK PERFORMED DURING CONSTRUCTION. JOB SITE SAFETY IS STRICTLY THE RESPONSIBILITY OF THE CONTRACTOR AND NOT THE ENGINEER OR OWNER.
7. ANY PROPRIETARY COMPONENTS, MOUNTS, MATERIALS, CHEMICAL, EPOXY AND WEDGE ANCHORS, AND SHOT PINS SHALL BE EXACTLY AS CALLED FOR IN THESE DRAWINGS. ANY DEVIATIONS SHALL BE APPROVED OR DISAPPROVED BY THE ENGINEER AT THE EXPENSE OF THE ENTITY REQUESTING THE SUBSTITUTION PRIOR TO THE INSTALLATION.
8. THE CONTRACTOR'S SCOPE OF WORK SHALL INCLUDE ALL ITEMS DEFINED IN THE CONTRACT DOCUMENTS. THE CONTRACT DOCUMENTS INCLUDE, BUT ARE NOT LIMITED TO, THE FOLLOWING: THE CONTRACT, SPECIFICATIONS AND CONSTRUCTION DRAWINGS.
9. THE CONTRACTOR SHALL BE ULTIMATELY RESPONSIBLE FOR COORDINATION AND ASSEMBLY OF ALL PARTS OF THE CONSTRUCTION DEPICTED HEREIN. THE CONTRACTOR SHALL PERFORM ANY CONSTRUCTABILITY REVIEW OR COORDINATION DRAWINGS NECESSARY TO IDENTIFY CONSTRUCTABILITY PROBLEMS PRIOR TO CONSTRUCTION.
10. THE CONTRACTOR SHALL VISIT THE JOB SITE TO REVIEW THE SCOPE OF WORK AND EXISTING JOB SITE CONDITIONS INCLUDING, BUT NOT LIMITED TO, MECHANICAL, ELECTRICAL SERVICE AND OVERALL COORDINATION. THE CONTRACTOR SHALL VERIFY ALL EXISTING CONDITIONS AND DIMENSIONS PRIOR TO SUBMITTING HIS BID. ANY DISCREPANCIES, CONFLICTS OR OMISSIONS, ETC., SHALL BE REPORTED TO THE CARRIER CONSTRUCTION SUPERVISOR BEFORE PROCEEDING WITH THE WORK.
11. THE CONTRACTOR SHALL PROTECT ALL AREAS FROM DAMAGE WHICH MAY OCCUR DURING CONSTRUCTION. ANY DAMAGE TO NEW AND EXISTING STRUCTURES, LANDSCAPING OR EQUIPMENT SHALL BE IMMEDIATELY REPAIRED OR REPLACED TO THE SATISFACTION OF THE TENANT, BUILDING OWNER OR OWNER'S REPRESENTATIVE AT THE EXPENSE OF THE CONTRACTOR.
12. IT SHALL BE THE RESPONSIBILITY OF THE CONTRACTOR TO LOCATE ALL EXISTING UTILITIES, WHETHER SHOWN HEREON OR NOT, AND TO PROTECT THEM FROM DAMAGE. THE CONTRACTOR SHALL BEAR ALL EXPENSES FOR REPAIR OR REPLACEMENT OF UTILITIES OR OTHER PROPERTY DAMAGED IN CONJUNCTION WITH THE EXECUTION OF WORK.
13. THE CONTRACTOR SHALL BE RESPONSIBLE FOR THE COMPLETE SECURITY OF THE SITE WHILE THE JOB IS IN PROGRESS AND UNTIL THE JOB IS COMPLETED.
14. THE CONTRACTOR SHALL PROVIDE TEMPORARY WATER, POWER AND TOILET FACILITIES AS REQUIRED BY THE GOVERNING AGENCY.
15. THE CONTRACTOR AND ALL SUBORDINATE CONTRACTORS SHALL COMPLY WITH ALL LOCAL AND STATE AND FEDERAL REGULATIONS.
16. THE CONTRACTOR SHALL OBTAIN AND PAY FOR PERMITS, LICENSES AND INSPECTIONS NECESSARY FOR PERFORMANCE OF THE WORK AND INCLUDE THOSE IN THE COST OF THE WORK TO CARRIER.
17. CHECK ACCURACY OF ALL DIMENSIONS IN THE FIELD. UNLESS SPECIFICALLY NOTED, DO NOT FABRICATE ANY MATERIALS OFF SITE, NOR PERFORM ANY CONSTRUCTION ACTIVITIES UNTIL THE ACCURACY OF DRAWING DIMENSIONS HAVE BEEN VERIFIED AGAINST ACTUAL FIELD DIMENSIONS. IN ALL CASES WHERE A CONFLICT MAY OCCUR, SUCH AS BETWEEN ITEMS COVERED IN SPECIFICATIONS AND NOTES ON THE DRAWINGS OR BETWEEN GENERAL NOTES AND SPECIFIC PLANS OR DETAILS, THE ENGINEER SHALL BE NOTIFIED, AND HE/SHE WILL INTERPRET THE INTENT OF THE CONTRACT DOCUMENTS PRIOR TO THE INSTALLATION OF THAT PORTION OF WORK.
18. THE CONTRACTOR SHALL NOTIFY THE CARRIER CONSTRUCTION SUPERVISOR OF ANY CONFLICTS OR DISCREPANCIES IN THE CONTRACT DOCUMENTS OR FIELD CONDITIONS PRIOR TO EXECUTING THE WORK IN QUESTION.
19. THE CONTRACTOR SHALL NOTIFY THE CARRIER CONSTRUCTION SUPERVISOR IF DETAILS ARE CONSIDERED UNSOUND, UNSAFE, NOT WATERPROOF, OR NOT WITHIN CUSTOMARY TRADE PRACTICE. IF WORK IS PERFORMED, IT WILL BE ASSUMED THAT THERE IS NO OBJECTION TO THE DETAIL. DETAILS ARE INTENDED TO SHOW THE END RESULT OF THE DESIGN. MINOR MODIFICATIONS MAY BE REQUIRED TO SUIT JOB CONDITIONS, AND SHALL BE INCLUDED AS PART OF THE WORK.
20. EXISTING ELEVATIONS AND LOCATIONS TO BE JOINED SHALL BE VERIFIED BY THE CONTRACTOR BEFORE CONSTRUCTION. IF THEY DIFFER FROM THOSE SHOWN ON THE PLANS, THE CONTRACTOR SHALL NOTIFY THE CARRIER CONSTRUCTION SUPERVISOR SO THAT MODIFICATIONS CAN BE MADE BEFORE PROCEEDING WITH THE WORK.
21. ALL SYMBOLS AND ABBREVIATIONS USED ON THE DRAWINGS ARE CONSIDERED CONSTRUCTION STANDARDS. IF THE CONTRACTOR HAS QUESTIONS REGARDING THEIR EXACT MEANING, THE ENGINEER SHALL BE CONTACTED FOR CLARIFICATION BEFORE PROCEEDING WITH THE WORK.
22. THE CONTRACTOR SHALL PROVIDE ALL NECESSARY BLOCKING, BACKING, FRAMING, HANGERS OR OTHER SUPPORT NOT OTHERWISE SHOWN HEREIN. ALL SUSPENDED MECHANICAL EQUIPMENT TO BE SWAY OR LATERALLY BRACED.
23. GOVERNING AGENCY–APPROVED PLANS SHALL BE KEPT IN A PLAN BOX AND SHALL NOT BE USED BY WORKMEN. ALL CONSTRUCTION SETS SHALL REFLECT SAME INFORMATION. AT ALL TIMES THESE ARE TO BE UNDER THE CARE OF THE JOB SUPERINTENDENT.
24. DESIGN DRAWINGS ARE DIAGRAMMATIC ONLY AND SHALL BE FOLLOWED AS CLOSELY AS ACTUAL CONSTRUCTION CONDITIONS WILL PERMIT. ANY ERROR, OMISSION, OR DESIGN DISCREPANCY SHALL BE BROUGHT TO THE ATTENTION OF THE CARRIER CONSTRUCTION SUPERVISOR FOR CLARIFICATION OR CORRECTION BEFORE CONSTRUCTION.
25. AS–BUILT REQUIREMENTS: DO NOT USE RECORD DOCUMENTS FOR CONSTRUCTION PURPOSES. PROTECT RECORD DOCUMENTS FROM DETERIORATION AND LOSS IN A SECURE, FIRE–RESISTANT LOCATION. PROVIDE ACCESS TO RECORD DOCUMENTS FOR THE CARRIER CONSTRUCTION SUPERVISOR'S REFERENCE DURING NORMAL WORKING HOURS. MAINTAIN A CLEAN, UNDAMAGED SET OF BLUE OR BLACK LINE PRINTS OF CONTRACT DRAWINGS AND SHOP DRAWINGS. MARK THE SET TO SHOW THE ACTUAL INSTALLATION WHERE THE INSTALLATION VARIES SUBSTANTIALLY FROM THE WORK AS ORIGINALLY SHOWN. MARK WHICH DRAWINGS ARE MOST CAPABLE OF SHOWING CONDITIONS FULLY AND ACCURATELY. WHERE SHOP DRAWINGS ARE USED, RECORD A CROSS–REFERENCE AT THE CORRESPONDING LOCATION ON THE CONTRACT DRAWINGS. GIVE ATTENTION TO CONCEALED ELEMENTS THAT WOULD BE DIFFICULT TO MEASURE AND RECORD AT A LATER DATE. MARK RECORD SETS WITH RED ERASABLE PENCIL. USE OTHER COLORS TO DISTINGUISH BETWEEN VARIATIONS IN SEPARATE CATEGORIES OF THE WORK. MARK NEW INFORMATION THAT IS IMPORTANT TO THE OWNER BUT WAS NOT SHOWN ON THE CONTRACT DRAWINGS, DETAILS OR SHOP DRAWINGS. NOTE RELATED CHANGE ORDER NUMBERS WHERE APPLICABLE. NOTE RELATED RECORD DRAWING INFORMATION AND PRODUCT DATA. UPON COMPLETION OF THE WORK, SUBMIT ONE (1) COMPLETE SET OF RECORD DOCUMENTS TO THE CARRIER CONSTRUCTION SUPERVISOR FOR THE OWNER'S RECORDS.
26. A CLOSEOUT BOOK CONTAINING THE FOLLOWING, SHALL BE PROVIDED BY THE CONTRACTOR, AS APPLICABLE:
    - A. AS BUILT DESIGN DRAWINGS
    - B. SWEEP TEST RESULTS
    - C. RESISTIVELY TEST
    - D. PHOTO DOCUMENTATION OF:
        - I. UNDERGROUND CONDUITS AND GROUND RING
        - II. ANTENNA, COAX, JUMPER ATTACHMENTS AND GROUND KIT ATTACHMENTS
        - III. ANTENNA DOWN TILT MEASUREMENT USING AN INCLINOMETER ON THE BACK PLANE OF THE ANTENNA
        - IV. GROUND BAR ATTACHMENTS
    - E. SIGNED OFF PERMIT CARDS
    - F. CERTIFICATE OF OCCUPANCY
    - G. RETURN OF KEYS AND/OR ACCESS AUTHORIZATION
    - H. ORIGINAL BUILDING PERMIT

SITE WORK NOTES

1. SCOPE: CLEARING, GRUBBING, STRIPPING, EROSION CONTROL, SURVEY, LAYOUT, SUB GRADE PREPARATION, FINISH GRADING AND SECURITY FENCE, AS REQUIRED BY CONSTRUCTION DRAWINGS AND DETAIL DRAWINGS.
2. REFERENCES:
    - A. DEPARTMENT OF TRANSPORTATION CONSTRUCTION AND MATERIAL SPECIFICATIONS FOR THE STATE IN WHICH THE PROJECT IS LOCATED.
    - B. ASTM (AMERICAN SOCIETY FOR TESTING AND MATERIALS)
    - C. OSHA (OCCUPATIONAL SAFETY AND HEALTH ADMINISTRATION)
    - D. AASHTO (AMERICAN ASSOCIATION OF STATE TRANSPORTATION OFFICIALS)
3. INSPECTION AND TESTING:
    - A. FIELD TESTING OF EARTHWORK, AGGREGATE BASE COURSE, COMPATION AND CONCRETE TESTING SHALL BE PERFORMED BY THE CONTRACTOR'S INDEPENDENT TESTING LAB.
    - B. ALL WORK SHALL BE INSPECTED AND RELEASED BY THE CARRIER CONSTRUCTION SUPERVISOR WHO SHALL CARRY OUT THE GENERAL INSPECTION OF THE WORK WITH SPECIFIC CONCERN TO PROPER PERFORMANCE OF THE WORK AS SPECIFIED AND/OR CALLED FOR ON THE DRAWINGS. IT IS THE CONTRACTOR'S RESPONSIBILITY TO REQUEST TIMELY INSPECTIONS PRIOR TO PROCEEDING WITH FURTHER WORK THAT WOULD MAKE PARTS OF THE WORK INACCESSIBLE OR DIFFICULT TO INSPECT.
4. SITE MAINTENANCE AND PROTECTION:
    - A. PROVIDE ALL NECESSARY JOB SITE MAINTENANCE FROM COMMENCEMENT OF THE WORK UNTIL COMPLETION OF THE CONTRACT.
    - B. CONTACT THE ONE–CALL UTILITY LOCATION SERVICE PRIOR TO ANY EXCAVATING ACTIVITIES TO HAVE LOCATIONS OF UNDERGROUND UTILITIES VERIFIED.
    - C. AVOID DAMAGE TO THE SITE INCLUDING EXISTING FACILITIES, STRUCTURES, TREES AND SHRUBS DESIGNATED TO REMAIN. TAKE PROTECTIVE MEASURES TO PREVENT EXISTING ITEMS THAT ARE NOT DESIGNATED FOR REMOVAL FROM BEING DAMAGED BY THE WORK.
    - D. KEEP SITE FREE OF ALL PONDING WATER.
    - E. CONTRACTOR SHALL PROVIDE ALL EROSION AND SEDIMENTATION CONTROL MEASURES AS REQUIRED BY LOCAL, CITY, COUNTY AND STATE CODES AND ORDINANCES TO PROTECT EMBANKMENTS FROM SOIL LOSS AND TO PREVENT ACCUMULATION OF SOIL AND SILT IN STREAMS AND DRAINAGE PATHS LEAVING THE CONSTRUCTION AREA. THIS MAY INCLUDE SUCH MEASURES AS SILT FENCES, STRAW BALE SEDIMENT BARRIERS AND CHECK DAMS.
    - F. PROVIDE AND MAINTAIN ALL TEMPORARY FENCING, BARRICADES, WARNING SIGNALS AND SIMILAR DEVICES NECESSARY TO PROTECT LIFE AND PROPERTY DURING THE ENTIRE PERIOD OF CONSTRUCTION. REMOVE ALL SUCH DEVICES UPON COMPLETION OF THE WORK.
5. BEFORE STARTING GENERAL SITE PREPARATION ACTIVITIES, INSTALL EROSION AND SEDIMENT CONTROL MEASURES. THE WORK AREA SHALL BE CONSTRUCTED AND MAINTAINED IN SUCH CONDITION THAT IN THE EVENT OF RAIN THE SITE WILL BE WELL DRAINED AT ALL TIMES.
6. ENSURE POSITIVE DRAINAGE DURING AND AFTER COMPLETION OF CONSTRUCTION.
7. PERFORM ALL SURVEY, LAYOUT, STAKING AND MARKING TO ESTABLISH AND MAINTAIN ALL LINES, GRADES, ELEVATIONS AND BENCHMARKS NEEDED FOR EXECUTION OF THE WORK.
8. CLEAR AND GRUB THE AREA WITHIN THE LIMITS OF THE SITE AND ONLY THE IMMEDIATE SURROUNDINGS NECESSARY TO COMPLETE THE WORK. REMOVE TREES, BRUSH, STUMPS, RUBBISH AND OTHER DEBRIS AND VEGETATION RESTING ON OR PROTRUDING THROUGH THE SURFACE OF THE SITE AREA TO BE CLEARED AND GRUBBED.
9. REMOVE FROM THE SITE AND DISPOSE IN AN AUTHORIZED LANDFILL ALL DEBRIS RESULTING FROM CLEARING AND GRUBBING OPERATIONS. BURNING IS NOT PERMITTED.
10. PRIOR TO EXCAVATING, THOROUGHLY EXAMINE THE AREA TO BE EXCAVATED AND/OR TRENCHED TO VERIFY THE LOCATIONS OF FEATURES INDICATED ON THE DRAWINGS, AND ASCERTAIN THE EXISTENCE AND LOCATION OF ANY STRUCTURE, UNDERGROUND STRUCTURE, CULVERT, STREAM CROSSING OR OTHER ITEM NOT SHOWN THAT MIGHT AFFECT OR INTERFERE WITH THE NEW CONSTRUCTION. NOTIFY THE CARRIER CONSTRUCTION SUPERVISOR OF ANY OBSTRUCTIONS THAT WILL PREVENT ACCOMPLISHMENT OF THE WORK AS INDICATED ON THE DRAWINGS.
11. SEPARATE AND STOCKPILE ALL EXCAVATED MATERIALS SUITABLE FOR BACK FILL. ALL EXCESS EXCAVATED, AND UNSUITABLE MATERIALS SHALL BE DISPOSED OF IN AN AREA DESIGNATED BY THE CARRIER CONSTRUCTION SUPERVISOR. (UNSUITABLE MATERIAL MAY BE REQUIRED TO BE REMOVED FROM THE SITE.)

SECURITY FENCE NOTES

1. PROVIDE AND INSTALL THE GALVANIZED FENCE WITH ASSOCIATED POSTS, RAILS, BRACES, FABRIC, TERMINAL POST, GATES, DROP BAR AND BARBED WIRE. USE APPLICABLE PROVISIONS OF ASTM FOR MATERIALS.
2. FABRIC SHALL BE HEAVY GALVANIZED CHAIN LINK FENCE, CONFORMING TO ASTM A392 2–INCH MESH 9 GAUGE WIRE (0.148 INCHES IN DIAMETER) WITH THE TOP AND BOTTOM SELVAGES TWISTED AND BARBED.
3. POSTS:
    - A. LINE POST FOR FABRIC UP TO 8 FEET HIGH SHALL BE 2–3/8 INCH O.D.
    - B. END CORNER, PULL POST AND GATE POST SHALL BE 2–7/8 INCH O.D. ALL POSTS SHALL BE SCHEDULE 40 GALVANIZED STEEL PIPE IN ACCORDANCE WITH ALL APPLICABLE ASTM STANDARDS FOR FENCES OVER 8 FEET HIGH, SIZE POST ACCORDING TO MANUFACTURER'S RECOMMENDATIONS.
4. TOP RAILS SHALL CONFORM TO 1–1/4 INCH (1.66–INCH O.D.), SCHEDULE 40 GALVANIZED STEEL PIPE IN ACCORDANCE WITH ASTM4 A12D.
5. TENSION WIRE SHALL BE 7–GAUGE U.S. STEEL WIRE GALVANIZED IN ACCORDANCE WITH ASTM A116, COATING CLASS III.
6. BRACE BANDS, TENSION BANDS AND TENSION BARS SHALL BE FABRICATED OF 1/8 INCH BY 7/8 INCH GALVANIZED STEEL WITH GALVANIZED STEEL CARRIAGE BOLTS AND NUTS IN ACCORDANCE WITH ASTM4 A123. TENSION BARS SHALL BE 1/4 INCH BY 3/4 INCH GALVANIZED STEEL BAR IN ACCORDANCE WITH ASTM A153.
7. FABRIC TIES SHALL BE CLASS I GALVANIZED STEEL WIRE NO LESS THAN 9–GAUGE.
8. POST TOPS SHALL BE PRESSED STEEL OR MALLEABLE IRON AND SHALL BE GALVANIZED PER ASTM A15J.
9. BARBED WIRE SHALL CONSIST OF DOUBLE STRANDED 12–1/2 GAUGE WIRE ASTM A121, CLASS 3 WITH 4–POINT BARBS SPACED 5 INCHES APART. THE TOP 1 FOOT OF THE FENCE SHALL CONSIST OF 3 STRANDS OF BARBED WIRE ATTACHED TO 45–DEGREE ANGLE, HEAVY–PRESSED ARMS CAPABLE OF WITHSTANDING WITHOUT FAILURE 250 POUNDS DOWNWARD PULL AT THE OUTERMOST END OF THE ARM.
10. GATE MATERIALS, SUCH AS FABRIC, BOLTS, NUTS, TENSION BARS AND BARBED WIRE SHALL BE CONSISTENT WITH FENCE MATERIALS.
11. THE BOTTOM OF THE FENCE SHALL BE 2 INCHES BELOW THE TOP OF THE COMPOUND GRAVEL IF THE SITE CROSSES FEATURES SUCH AS DRAINAGE DITCHES, ETC., THE FENCE SHALL SPAN THE DEPRESSION. CLOSE THE SPACE BELOW THE BOTTOM OF THE FENCE WITH EXTRA FENCE FABRIC OR BARBED WIRE AS DIRECTED BY THE CARRIER CONSTRUCTION SUPERVISOR. PRIOR TO PLACING COMPONENTS SUCH AS FABRIC, RAILS, TENSION WIRE AND GATES, ENSURE THAT THE CONCRETE POST FOUNDATION HAS REACHED AT LEAST 75% OF ITS DESIGN STRENGTH OR HAS CURED A MINIMUM OF 7 DAYS AFTER SETTING THE POST.
12. FURNISH GATES WITH NECESSARY FITTINGS AND HARDWARE. HINGES SHALL ALLOW SWING GATES TO SWING 180 DEGREES. PLUNGER BARS SHALL HAVE TOP, BOTTOM AND MIDDLE LOCKING POINTS WITH THE MIDDLE POINT ARRANGED FOR PADLOCKING. GATES SHALL HAVE KEEPERS ON EACH LEAF THAT ENGAGE AUTOMATICALLY WHEN THE GATE IS SWUNG OPEN. REPAIR GALVANIZED COATING DAMAGED IN THE FIELD WITH METHODS AND TECHNIQUES AS RECOMMENDED BY THE MANUFACTURER.

T-Mobile

AMERICAN TOWER®

POWDER RIVER
Engineering Services, LLC
www.powderriverdev.com

BUSINESS LICENSE #: 3004

REVISIONS

REV	DATE	DESCRIPTION	INT
0	08/13/18	100% CONSTRUCTION	JPN
A	06/14/18	ISSUED FOR REVIEW 90%	SDA

8813
REGISTERED ARCHITECT
GLENN WALKER
STATE OF WASHINGTON
08/13/18

THESE PLANS AND SPECIFICATIONS, AS INSTRUMENTS OF SERVICE, ARE AND SHALL REMAIN THE PROPERTY OF POWDER RIVER DEVELOPMENT SERVICES, LLC WHETHER THE PROJECTS FOR WHICH THEY ARE MADE ARE EXECUTED OR NOT. THESE DRAWINGS AND SPECIFICATIONS SHALL NOT BE USED BY ANY PERSON OR ENTITY ON OTHER PROJECTS WITHOUT PRIOR WRITTEN CONSENT OF THE ENGINEER.

SITE INFORMATION

T-MOBILE #: PO02600A

ATC #: 310444

184 RATTLESNAKE RD.
CENTERVILLE, WA
98613

SHEET TITLE:

GENERAL NOTES

SHEET NUMBER:

GN-1

THE INFORMATION CONTAINED IN THIS SET OF CONSTRUCTION DOCUMENTS IS PROPRIETARY BY NATURE. ANY USE OR DISCLOSURE OTHER THAN THAT WHICH RELATES TO CARRIER SERVICES IS STRICTLY PROHIBITED.

ELECTRICAL NOTES

1. THESE NOTES DESCRIBE THE MINIMUM REQUIREMENT FOR INSTALLATION OF ALL ELECTRICAL SYSTEMS. SUBMITTAL OF BID INDICATES THAT THE CONTRACTOR IS COGNIZANT OF ALL JOB SITE CONDITIONS AND WORK TO BE PERFORMED UNDER THIS CONTRACT.
2. THE PUBLICATIONS LISTED BELOW FORM PART OF THESE NOTES. EACH PUBLICATION SHALL BE THE LATEST REVISION AND ADDENDUM IN EFFECT ON THE DATE THIS SPECIFICATION IS ISSUED FOR CONSTRUCTION, UNLESS NOTED OTHERWISE. EXCEPT AS MODIFIED BY THE REQUIREMENTS SPECIFIED HEREIN, OR THE DETAILS OF THE DRAWINGS, WORK INCLUDED IN THIS SPECIFICATION SHALL CONFORM TO THE APPLICABLE PROVISIONS OF THESE PUBLICATIONS:
   - A. ANSI (AMERICAN NATIONAL STANDARDS INSTITUTE)
   - B. IEEE (INSTITUTE OF ELECTRICAL AND ELECTRONICS ENGINEERS)
   - C. NEC (NATIONAL ELECTRICAL CODE), LATEST EDITION
   - D. NEMA (NATIONAL ELECTRICAL MANUFACTURERS ASSOCIATION)
   - E. NFPA 70 (NATIONAL FIRE PROTECTION ASSOCIATION)
   - F. OSHA (OCCUPATIONAL SAFETY AND HEALTH ADMINISTRATION), INCLUDING ALL APPLICABLE AMENDMENTS
   - G. UL (UNDERWRITERS LABORATORIES)
   - H. APPLICABLE LOCAL CODES AND ORDINANCES
3. THE CONTRACTOR SHALL INSTALL UNDERGROUND ELECTRICAL AND TELEPHONE CONDUITS AND CABLE AS SPECIFIED HEREIN AND AS SHOWN ON THE DRAWINGS.
4. WHEN FINISHED, WORK SHALL BE IN A COMPLETE AND UNDAMAGED STATE, AS REQUIRED IN THE CONTRACT DOCUMENTS.
5. ITEMS SHALL BE NEW AND SHALL BE INSTALLED ONLY IF IN FIRST–CLASS CONDITION.
6. SUBSTITUTIONS FOR MATERIAL WILL BE PERMITTED ONLY BY WRITTEN APPROVAL OF THE CARRIER CONSTRUCTION SUPERVISOR AND BY THE ENGINEER.
7. THE CONTRACTOR SHALL PROVIDE ALL MATERIAL EXCEPT AS SPECIFIED IN THE CONTRACT DOCUMENTS. ALL MATERIAL SHALL BE APPROVED AND LISTED BY OR BEAR THE UL LABEL, AND WILL COMPLY WITH ANSI, IEEE AND NEMA STANDARDS WHERE APPLICABLE.
8. CONDUITS:
   - A. ALL UNDERGROUND CONDUIT SHALL BE SCHEDULE 40 PVC , SIZED AS SHOWN ON THE CONSTRUCTION DRAWINGS.
   - B. ALL EXTERIOR ABOVEGROUND CONDUIT SHALL BE PER LOCAL CODE REQUIREMENTS.
   - C. ALL INTERIOR CONDUIT SHALL BE EMT WITH COMPRESSION–TYPE FITTINGS.
   - D. LIQUID–TIGHT FLEXIBLE METALLIC CONDUIT SHALL BE USED FOR OUTDOOR LOCATIONS WHERE FLEXIBLE CONNECTION IS REQUIRED.
9. CABLES CONDUCTORS FOR GENERAL WIRING SHALL BE NEC STANDARD ANNEALED COPPER WIRE WITH NEC 600–VOLT INSULATION.
   - A. #8 AND LARGER–STRANDED TYPE, THHN OR THWN.
   - B. #10 AND SMALLER–SOLID TYPE THHN OR THWN.
   - C. CONDUCTORS IN CONDUIT IN OR ADJACENT TO HIGH HEAT SOURCE SHALL BE TYPE XHHW.
   - D. CONDUCTORS IN CONDUITS ABOVE ROOF, ON TOP OF ROOF OR INSIDE BUILT–UP ROOFING MATERIAL SHALL BE TYPE XHHW
10. CONVENIENCE OUTLET, UNLESS NOTED OTHERWISE, SURFACE–MOUNTED OUTLETS FOR EXTERIOR LOCATIONS SHALL BE FERALOY, CAD/ZINC ELECTROPLATED WITH THREADED HUBS OR CONDUIT ENTRANCES DRILLED AND TAPPED. ALL COVERS SHALL BE SELF–CLOSING AND GASKETED. SURFACE MOUNTED OUTLETS FOR INTERIOR LOCATIONS SHALL BE GALVANIZED, PRESSED STEEL WITH COVER PLATE, SIERRA PLASTIC STYLE, IVORY COLOR.
11. COAXIAL CABLE SUPPORTS 1. ALL WAVE GUIDE SUPPORTS SHALL BE MANUFACTURED TO MEET ALL COAX MINIMUM BENDING REQUIREMENTS. SUPPORTS SHALL BE PROVIDED EVERY 3'–0" ON CENTER.
12. BEFORE LAYING OUT WORK, EXERCISE PROPER PRECAUTION TO VERIFY EACH MEASUREMENT.
13. USE EXTREME CAUTION BEFORE EXCAVATING IN EXISTING AREAS TO LOCATE EXISTING UNDERGROUND SERVICES.
14. A VISUAL CHECK OF ELECTRICAL AND TELEPHONE CABLES, CONDUITS AND OTHER ITEMS SHALL BE MADE BY A CARRIER CONSTRUCTION SUPERVISOR BEFORE THESE ITEMS ARE PERMANENTLY INSTALLED.
15. THE CONTRACTOR SHALL NOTIFY THE CARRIER CONSTRUCTION SUPERVISOR 24 HOURS PRIOR TO TRENCH BACK FILL.
16. TRENCHING, BACK FILLING, BEDDING AND COMPACTING SHALL COMPLY WITH SITE WORK SPECIFICATIONS.
17. DIG TRENCHES TO THE REQUIRED DEPTH AS SHOWN ON THE DRAWINGS WITHOUT POCKETS OR DIPS. REMOVE LARGE STONES FROM THE BOTTOM OF THE TRENCH AND FIRMLY TAMP LOOSE FILL IN THE BOTTOM BEFORE CONDUIT IS LAID.
18. INSTALL UNDERGROUND CONDUIT WITH A MINIMUM 3–INCH TO 100–FOOT SLOPE OR TO A SLOPE SHOWN ON THE DRAWINGS.
19. UNLESS SHOWN OTHERWISE ON THE DRAWINGS, TERMINATE AND CAP ALL STUB–UPS 12 INCHES ABOVE FINISHED GRADE ELEVATION.
20. WHEREVER CONDUITS CROSS UNDER ROADWAYS, USE GALVANIZED RIGID STEEL CONDUITS IN ALL CASES, EXTENDING 5 FEET BEYOND THE EDGE OF THE ROAD BED. MINIMUM DEPTH FOR CONDUIT SHALL BE 4 FEET BELOW ROADWAY GRADE.
21. MARK UNDERGROUND CONDUITS WITH A 6–INCH WIDE RED POLYETHYLENE TAPE BURIED 6 INCHES UNDER THE SURFACE DIRECTLY OVER THE CONDUITS. MARK THE TAPE THUS: CAUTION–BURIED ELECTRICAL CABLE.
22. FOR SEALING CONDUITS, USE ONLY NON–THERMOPLASTIC COMPOUNDS SUCH AS J.M. DUXSEAL, OR AN CARRIER–APPROVED SUBSTITUTE. THE COMPOUND SHALL HAVE NO EFFECT ON RUBBER OR RUBBER–LIKE INSULATIONS, LEAD, ALUMINUM OR FERROUS ALLOYS; IT SHALL BE INSOLUBLE IN WATER AND WITHSTAND MAXIMUM TEMPERATURE RANGES OF THE LOCALITY.
23. COAXIAL – REFER TO ANTENNA AND COAXIAL CABLE INSULATION PROCEDURES.
24. ANTENNA – REFER TO ANTENNA AND COAXIAL CABLE INSULATION PROCEDURES.
25. LNA/MHA – REFER TO ANTENNA AND COAXIAL CABLE INSULATION PROCEDURES.

GROUNDING NOTES

1. THIS SPECIFICATION PRESCRIBES THE REQUIREMENTS FOR FURNISHING, INSTALLATION AND TESTING OF THE GROUNDING CABLE, CONNECTORS AND ASSOCIATED COMPONENTS AS INDICATED ON THE DRAWINGS.
2. APPLICATIONS OF ELECTRICAL GROUNDING AND BONDING WORK SPECIFIED IN THIS SPECIFICATION INCLUDE THE FOLLOWING:
   - A. FENCE AND GATE POSTS
   - B. ELECTRICAL POWER SYSTEMS
   - C. GROUNDING ELECTRODES
   - D. GROUND BUS BAR
   - E. SERVICE EQUIPMENT
   - F. ENCLOSURES
   - G. MONOPOLE / LATTICE TOWER
   - H. ICE BRIDGE
3. REFERENCES: THE PUBLICATIONS LISTED BELOW FORM PART OF THESE DRAWINGS. EACH PUBLICATION SHALL BE THE LATEST REVISION AND ADDENDUM IN EFFECT ON THE DATE THESE DRAWINGS ARE ISSUED FOR CONSTRUCTION, UNLESS NOTED OTHERWISE. EXCEPT AS MODIFIED BY THE REQUIREMENTS SPECIFIED HEREIN, OR THE DETAILS OF THE DRAWINGS, WORK INCLUDED IN THESE DRAWINGS SHALL CONFORM TO THE APPLICABLE PROVISIONS OF THESE PUBLICATIONS.
   - A. ANSI (AMERICAN NATIONAL STANDARDS INSTITUTE)
   - B. IEEE (INSTITUTE OF ELECTRICAL AND ELECTRONICS ENGINEERS)
   - C. NEC (NATIONAL ELECTRICAL CODE), LATEST EDITION
   - D. NEMA (NATIONAL ELECTRICAL MANUFACTURERS ASSOCIATION)
   - E. NESC (NATIONAL ELECTRICAL SAFETY CODE), LATEST EDITION
   - F. OSHA (OCCUPATIONAL SAFETY AND HEALTH ADMINISTRATION)
   - G. UL (UNDERWRITERS' LABORATORIES)
   - H. APPLICABLE LOCAL CODES AND ORDINANCES
4. MATERIALS: EXCEPT AS OTHERWISE INDICATED, PROVIDE ELECTRICAL GROUNDING AND BONDING SYSTEMS INDICATED; WITH ASSEMBLY OF MATERIAL, INCLUDING, BUT NOT LIMITED TO, GROUNDING ELECTRODES, BONDING JUMPER AND ADDITIONAL ACCESSORIES NEEDED FOR A COMPLETE INSTALLATION. WHERE MORE THAN ONE TYPE OF COMPONENT PRODUCT MEETS INDICATED REQUIREMENTS, SELECTION IS INSTALLER'S OPTION. WHERE MATERIALS OR COMPONENTS ARE NOT INDICATED, PROVIDE PRODUCTS WHICH COMPLY WITH NEC, UL, AND IEEE REQUIREMENTS AND WITH ESTABLISHED INDUSTRY STANDARDS FOR THOSE APPLICATIONS INDICATED.
   - A. GROUNDING:
     - I. THE EQUIPMENT SHALL BE GROUNDED AS FOLLOWS, AS SHOWN ON THE DRAWINGS AND IN COMPLIANCE WITH NEC ARTICLE 250 AND STATE AND LOCAL CODES.
     - II. GROUND RODS AND QUANTITY SHOWN ON THE DRAWINGS ARE DIAGRAMMATIC. THE CONTRACTOR SHALL PERFORM A GROUND–RESISTANCE–TO–EARTH TEST. SHOULD THE INSTALLATION HAVE A RESISTANCE OF 5 OHMS OR MORE, CONTRACTOR SHALL INSTALL MORE GROUND RODS AS NECESSARY SO THAT THE OVERALL GROUND–TO–EARTHRESISTANCE IS LESS THAN 5 OHMS.
     - III. INSTALL ELECTRICAL GROUNDING AND BONDING SYSTEMS AS INDICATED, IN ACCORDANCE WITH MANUFACTURER'S INSTRUCTIONS, NEC'S "STANDARD OF INSTALLATION," AND IN ACCORDANCE WITH RECOGNIZED INDUSTRY PRACTICES TO ENSURE THAT PRODUCTS COMPLY WITH REQUIREMENTS.
     - IV. COORDINATE WITH OTHER ELECTRICAL WORK AS NECESSARY TO INTERFACE INSTALLATION OF ELECTRICAL GROUNDING AND BONDING SYSTEMS.
     - V. INSTALL GROUND CONDUCTORS A MINIMUM OF 36 INCHES BELOW FINISHED GRADE WHICH ENCIRCLE THE TOWER AND EQUIPMENT, AND ARE CONNECTED TO EACH DRIVEN GROUND ROD. GROUND TRENCH SHALL BE AT LEAST 24 INCHES AWAY FROM FOUNDATIONS.
     - VI. TIGHTEN GROUNDING AND BONDING CONNECTORS, INCLUDING SCREWS AND BOLTS, IN ACCORDANCE WITH MANUFACTURER'S PUBLISHED TORQUE TIGHTENING VALUE FOR CONNECTORS AND BOLTS. WHERE MANUFACTURER'S TORQUEING REQUIREMENTS ARE NOT INDICATED, TIGHTEN CONNECTIONS TO COMPLY WITH TIGHTENING TORQUE VALUE SPECIFIED IN UL 486A TO ASSURE PERMANENT AND EFFECTIVE GROUNDING.
     - VII. APPLY CORROSION–RESISTANT FINISH (NO–OX OR CARRIER–APPROVED EQUIVALENT) TO FIELD–CONNECTIONS, AT COPPER GROUND BARS AND PLACES WHERE FACTORY APPLIED PROTECTIVE COATING HAVE BEEN DESTROYED, OR ARE SUBJECTED TO CORROSIVE AND/OR OXIDATION PROCESS.
     - VIII. ON EXISTING LATTICE TOWERS, WATER TOWERS AND ROOF TOPS, WHEN A NEW GROUNDING SYSTEM IS INSTALLED, THE CONTRACTOR SHALL TIE THE NEW GROUND SYSTEM TO THE EXISTING WATER TOWER, LATTICE TOWER STRUCTURAL STEEL OR BUILDING STRUCTURAL STEEL AS THE CASE MAY BE AT A MINIMUM OF ONE LOCATION SO THAT THEY ARE AT THE SAME VOLTAGE POTENTIAL.
     - IX. ALL TOWER AND TOP GROUND WIRES SHALL BE SUPPORTED EVERY TWO FEET MAXIMUM.
   - B. GROUND RODS:
     - I. GROUND RODS SHALL BE 5/8" DIAMETER WITH 8'–0" EMBEDMENT MIN., COPPER CLAD DRIVEN ROD(S).
     - II. GROUND ROD(S) SHALL BE LOCATED AT THE PERIMETER OF EQUIPMENT AS TO CREATE A GROUND RING AS SHOWN ON THE DRAWINGS.
     - III. GROUND ROD(S) SHALL BE SPACED AT A MINIMUM OF 8'–0" AND A MAXIMUM SPACING OF 10'–0" ON CENTER.
     - IV. GROUND RODS SHALL BE BURIED BELOW THE FROSTLINE. AT NO TIME SHALL THIS DEPTH BE LESS THAN 18" BELOW FINISHED GRADE.
     - V. GROUND RODS WHICH CANNOT BE DRIVEN STRAIGHT DOWN THE ENTIRE 10'–0", SHALL BE DRIVEN AT AN ANGLE NOT GREATER THAN 45 DEGREES (NEC 250–83 AND 250–84).
     - VI. GROUND ROD LOCATIONS SHALL BE NOTED ON THE AS–BUILT DRAWING COMPLETE WITH DIMENSIONS.
     - VII. PROVIDE GROUND TEST WELLS SHOWN ON THE CONSTRUCTION DRAWINGS.
   - C. GROUND CONDUCTOR:
     - I. ALL DIRECT BURIED GROUND CONDUCTORS SHALL BE TINNED SOLID (#2 AWG) WIRE. BURIED GROUND CONDUCTOR SHALL BE INSTALLED AT MINIMUM DEPTH OF 36" BELOW GRADE.
     - II. ALL SUB GRADE GROUND CONNECTIONS SHALL BE MADE USING EXOTHERMIC WELD PROCESS. CONNECTIONS SHALL INCLUDE ALL CABLE TO CABLE SPLICES, TEES AND ALL GROUND ROD CONNECTIONS. MOLD, WELD KITS, ETC., SHALL BE MANUFACTURED BY CADWELD AND SHALL BE I NSTALLED AS PER THE MANUFACTURER'S INSTRUCTIONS.
     - III. GROUND CONDUCTORS SHALL BE ROUTED IN THE SHORTEST AND C STRAIGHTEST DISTANCES POSSIBLE TO MINIMIZE TRANSIENT VOLTAGE RISES. CONDUCTORS SHALL BE INSTALLED AS FOLLOWS:
     - IV. ALL GROUND CONDUCTORS SHALL FOLLOW A CONTINUOUS DOWNWARD PATTERN TO THE GROUND SOURCE. (NEVER RUN GROUND CONDUCTOR IN AN UPWARD DIRECTION.)
     - V. CONDUCTORS SHALL BE INSTALLED WITH A MINIMUM OF 12–INCH MINIMUM BENDING RADIUS.
     - VI. WHEN THE MINIMUM BENDING RADIUS CANNOT BE ACHIEVED, GROUND CABLES SHALL BE ROUTED AT 90–DEGREE BENDS WITH THE USE OF EXOTHERMIC CONNECTIONS AT 90 DEGREES, WITH THE INTENT IS TO ELIMINATE THE CABLE BEND RADIUS AND REPLACE THE RADIUS WITH AN EXOTHERMIC CONNECTION.
5. PREPARATION:
   - A. ALL SURFACES TO WHICH GROUND CONNECTIONS WILL BE MADE SHALL BE FREE OF PAINT, GALVANIZING DIRECT CORROSION, ETC.
   - B. ALL METAL SURFACES EXPOSED ON GROUNDING SHALL BE EITHER COLD GALVANIZE, OR PAINTED TO MATCH ORIGINAL SURFACE.
6. EXAMINE AREAS AND CONDITIONS UNDER WHICH ELECTRICAL GROUNDING AND BONDING CONNECTIONS ARE TO BE MADE AND NOTIFY CARRIER CONSTRUCTION SUPERVISOR AND ENGINEER OF RECORD IN WRITING OF CONDITIONS DETRIMENTAL TO PROPER COMPLETION OF WORK. DO NOT PROCEED WITH WORK UNTIL UNSATISFACTORY CONDITIONS HAVE BEEN CORRECTED. THE CONTRACTOR SHALL NOTIFY THE CARRIER CONSTRUCTION SUPERVISOR A MINIMUM OF 24 HOURS PRIOR TO TRENCH BACK FILL. ALL WORK DONE BELOW FINISHED GRADE SHALL BE INSPECTED BY THE CONSTRUCTION SUPERVISOR DURING THAT PERIOD.
7. GROUND TESTING:
   - A. THE CONTRACTOR SHALL TEST THE GROUND ELECTRODE ROD RESISTANCE IN ACCORDANCE WITH THE METHODS OF MEASUREMENT DEFINED IN THE FALL OF POTENTIAL METHOD.
   - B. TEST INSTRUMENTS SHALL OPERATE AT A FREQUENCY OTHER THAN 60 HERTZ AND SHALL CONTAIN STRAY CURRENT AND DC FILTERS, FAULT CURRENT PROTECTION AND HAVE SENSITIVITY TO OPERATE A LOW SIGNAL STRENGTH.
   - C. PRIOR TO TESTING, THE CONTRACTOR SHALL DE–ENERGIZE ALL POWER SOURCES, DISCONNECT THE ELECTRODE CONDUCTOR FROM THE GROUND ROD, WEAR HIGH VOLTAGE RUBBER SAFETY GLOVES.
   - D. GROUND TESTS ARE TO BE PERFORMED BY QUALIFIED PERSONS FAMILIAR WITH THE CONSTRUCTION AND OPERATION OF THE EQUIPMENT AND THE HAZARDS INVOLVED.
   - E. AN INDEPENDENT, APPROVED OUTSIDE FIRM SHALL PERFORM THE GROUND TEST AS OUTLINED. ALL TEST RESULTS SHALL BE FORWARDED TO THE CARRIER CONSTRUCTION SUPERVISOR FOR APPROVAL.

T-Mobile

AMERICAN TOWER®

POWDER RIVER
Engineering Services, LLC
www.powderriverdev.com

BUSINESS LICENSE #: 3004

REVISIONS

REV	DATE	DESCRIPTION	INT
0	08/13/18	100% CONSTRUCTION	JPN
A	06/14/18	ISSUED FOR REVIEW 90%	SDA

8813
REGISTERED ARCHITECT
GLENN WALKER
STATE OF WASHINGTON
08/13/18

THESE PLANS AND SPECIFICATIONS, AS INSTRUMENTS OF SERVICE, ARE AND SHALL REMAIN THE PROPERTY OF POWDER RIVER DEVELOPMENT SERVICES, LLC WHETHER THE PROJECTS FOR WHICH THEY ARE MADE ARE EXECUTED OR NOT. THESE DRAWINGS AND SPECIFICATIONS SHALL NOT BE USED BY ANY PERSON OR ENTITY ON OTHER PROJECTS WITHOUT PRIOR WRITTEN CONSENT OF THE ENGINEER.

SITE INFORMATION

T-MOBILE #: PO02600A

ATC #: 310444

184 RATTLESNAKE RD.
CENTERVILLE, WA
98613

SHEET TITLE:

GENERAL NOTES

SHEET NUMBER:

GN-2

THE INFORMATION CONTAINED IN THIS SET OF CONSTRUCTION DOCUMENTS IS PROPRIETARY BY NATURE. ANY USE OR DISCLOSURE OTHER THAN THAT WHICH RELATES TO CARRIER SERVICES IS STRICTLY PROHIBITED.

CONCRETE NOTES

1. THE MINIMUM ULTIMATE COMPRESSIVE STRENGTH OF CONCRETE AT 28 DAYS SHALL BE AS FOLLOWS:

   F'C = 4,000 PSI – FOOTINGS, GRADE BEAMS & ALL OTHER CONCRETE, U.N.O.

   F'C = 4,000 PSI – RETAINING WALLS & PILASTERS

   F'C = 4,000 PSI – SLAB ON GRADE

2. ALL CONCRETE UNLESS NOTED OTHERWISE SHALL BE NORMAL WEIGHT TYPE (150 PCF). AGGREGATES SHALL CONFORM TO ASTM C–33 WITH PROVEN SHRINKAGE CHARACTERISTICS OF LESS THAN .05% (MAXIMUM SIZE).
3. CEMENT SHALL CONFORM TO ASTM C–150 (TYPE V) UNLESS NOTED OTHERWISE ON THE DRAWINGS.
4. CONCRETE MIX DESIGN FOR DESIGN COMPRESSIVE STRENGTH GREATER THAN 2500 P.S.I. SHALL BE PREPARED BY AN APPROVED TESTING LABORATORY AND SHALL BE STAMPED AND SIGNED BY A LICENSED ENGINEER, IN THE STATE OF JURISDICTION. THE MIX DESIGN SHALL THEN BE SUBMITTED TO THE ENGINEER OF RECORD FOR REVIEW. THE USE OF A POLYMER BASED WATER REDUCING ADMIXTURE IS OPTIONAL, BUT IF USED, SHALL BE SUBMITTED TO THE ENGINEER FOR REVIEW.
5. DESIGN MIXES TO PROVIDE NORMAL WEIGHT CONCRETE WITH THE FOLLOWING REQUIREMENTS:
   A. THE MAXIMUM ALLOWABLE CONCRETE SHRINKAGE (28 DAYS) SHALL BE AS FOLLOWS:

      .04% – WALLS

      .06% – SLABS, FOUNDATIONS AND ALL OTHER CONCRETE, U.N.O.

   B. FLY ASH SHALL BE A MINIMUM OF 15%, MAXIMUM OF 25%, OF THE TOTAL CEMENTITIOUS MATERIAL OF ALL MIX DESIGNS FOR CONCRETE > 4000 P.S.I.. FLY ASH WITH THESE SAME LIMITS MAY ALSO BE USED IN ANY OTHER MIX DESIGN FOR CONCRETE STRENGTH < 4000 P.S.I.
   C. FLY ASH SHALL CONFORM TO ASTM C–618, CLASS F, WITH MAXIMUM LOSS ON IGNITION (L.O.I.)TO BE 3%.
   D. MAXIMUM ALLOWABLE WATER–TO–CEMENT (W/C) RATIO SHALL INCLUDE THE TOTAL WEIGHT OF CEMENT AND FLY ASH.
6. CONCRETE SHALL BE CURED AND PROTECTED IN ACCORDANCE WITH ACI 308.1–11.
7. CONCRETE SHALL NOT FREE FALL MORE THAN FIVE FEET. USE TREMIE OR PUMP.
8. LOCATION OF CONSTRUCTION JOINTS AND OTHER TYPES OF JOINTS, OTHER THAN THOSE SPECIFIED OR DETAILED, SHALL BE APPROVED BY THE ENGINEER BEFORE PLACEMENT OF CONCRETE.
9. ALL CONCRETE WITH 28 DAY STRENGTH GREATER THAN 2500 PSI SHALL BE INSPECTED IN ACCORDANCE WITH THE REQUIREMENTS AND FREQUENCY OF INSPECTION DEFINED IN IBC TABLE 1705.3 AS PRESENTED ON VERIFICATION AND INSPECTION NOTES AND TABLES – SEE SPECIAL INSPECTION NOTES. ANY EXCEPTIONS TO THIS REQUIREMENT WILL BE STATED ON THE PLANS OR SPECIFIC DETAILS.
10. PRIOR TO PLACING CONCRETE, REINFORCING STEEL AND EMBEDDED ITEMS SHALL BE WELL–SECURED IN POSITION.
11. SLEEVES NOT SPECIFICALLY SHOWN ON THE DRAWINGS SHALL BE LOCATED BY THE TRADES INVOLVED AND SHALL BE REVIEWED BY THE ENGINEER BEFORE THE CONCRETE IS PLACED. CHECK WITH ALL TRADES TO ENSURE PROPER PLACEMENT OF OPENINGS, SLEEVES, CURBS, CONDUITS, ETC., RELATED TO THE WORK. PIPES, CONDUITS OR DUCTS MAY PASS THROUGH STRUCTURAL CONCRETE IN EMBEDDED SLEEVES BUT SHALL NOT BE EMBEDDED IN STRUCTURAL SLABS, WALLS, CONTINUOUS FOOTINGS, GRADE BEAMS, SPREAD FOOTINGS, ETC. UNLESS SPECIFICALLY APPROVED BY THE ENGINEER. THE SPREAD FOOTING MAY BE LOWERED TO ALLOW THE PASSAGE OF PIPES, CONDUITS OR DUCTS THROUGH NON–STRUCTURAL SLABS. CONTRACTOR SHALL BE RESPONSIBLE FOR DETERMINING ELEVATIONS OF ALL FOUNDATIONS, COORDINATING WORK OF ALL TRADES PRIOR TO ANY PLACEMENT OF CONCRETE AND SHALL NOTIFY THE ENGINEER OF FIELD MODIFICATIONS.
12. SUPERIMPOSED LOADS SHALL NOT BE APPLIED TO ELEVATED STRUCTURAL CONCRETE MEMBERS PRIOR TO 7 DAYS MINIMUM AFTER CONCRETE PLACEMENT AND UNTIL 28 DAY STRENGTH HAS BEEN REACHED. SHORING SHALL REMAIN IN PLACE UNTIL CONCRETE HAS REACHED DESIGN STRENGTH. RESHORING SHALL REMAIN IN PLACE 28 DAYS MINIMUM. AT NO TIME DURING THE RESHORING PROCESS SHALL THE CONCRETE MEMBER BE UNSUPPORTED.
13. PROVIDE 3/4" CHAMFER AT EXPOSED EDGES OF CURBS, WALLS, CONCRETE BEAMS AND COLUMNS AND ALL OTHERVISIBLE EXTERIOR CONSTRUCTION JOINTS, U.N.O.
14. NON–SHRINK GROUT: SHALL CONFORM TO ASTM C–1107. MIN F'C = 6500 P.S.I. AT 28 DAYS.
15. ALL STRUCTURAL CONCRETE IS TO BE REINFORCED. UNLESS SHOWN OTHERWISE, SLABS ARE TO HAVE A MINIMUM REINFORCEMENT PERCENTAGE OF 0.20 CONTINUOUS EACH WAY AND WALLS ARE TO HAVE MINIMUM REINFORCEMENT PERCENTAGES OF 0.25 CONTINUOUS IN THE HORIZONTAL DIRECTION AND 0.15 CONTINUOUS IN THE VERTICAL DIRECTION.
16. CONCRETE FLOOR AND SLAB ON GRADE CONSTRUCTION SHALL CONFORM TO THE REQUIREMENTS OF ACI 302, "GUIDE FOR CONCRETE FLOOR AND SLAB CONSTRUCTION". FLATNESS / LEVELNESS SHALL CONFORM TO THE REQUIREMENTS OF ASTM E1155.

FOUNDATION NOTES

1. THE CONTRACTOR SHALL BE RESPONSIBLE FOR ALL SHORING, ETC. NECESSARY TO SUPPORT CUT AND/OR FILL BANKS DURING EXCAVATION AND FORMING AND PLACEMENT OF CONCRETE.
2. IF A GEOTECHNICAL ENGINEER HAS BEEN ENGAGED TO PROVIDE GEOTECHNICAL ENGINEERING SERVICES FOR THIS SITE AND SCOPE OF WORK, THE GEOTECHNICAL REPORT IN ITS ENTIRETY SHALL BE INCLUDED AS PART OF THESE CONTRACT DOCUMENTS AND SHALL SERPERSEDE ANY CONFLICTING DIRECTIVES CONTAINED WITHIN THESE NOTES, SHOULD ANY CONFLICTS BE PRESENT. FOR RECOMMENDED SOIL BEARING PRESSURE, FOUNDATION MATERIAL, FILL, FOUNDATION EXCAVATION AND SITE GRADING, REFER TO THE GEOTECHNICAL REPORT. ALL FILL AND FOUNDATION EXCAVATION SHALL BE OBSERVED AND APPROVED BY THE PROJECT GEOTECHNICAL ENGINEER PRIOR TO PLACING CONCRETE.
3. THE DESIGN ALLOWABLE SOIL BEARING PRESSURE IS 1500 PSF.
4. STRUCTURAL EXCAVATION:
   A. AFTER EXCAVATION, THE EXPOSED SOILS SHALL BE INSPECTED AND TESTED. ANY UNSUITABLE DEPOSITS SHALL BE REMOVED AS DIRECTED TO REACH SUITABLE BEARING SOIL. ALL OVER–EXCAVATED AREAS SHALL BE BACK FILLED WITH SELECT STRUCTURAL FILL OR WITH LEAN CONCRETE FILL TO THE ELEVATION OF THE BOTTOM OF FOOTING OR FOUNDATION AS INDICATED ON THE DRAWINGS.
   B. NO FOUNDATIONS OR STRUCTURES SHALL BE CONSTRUCTED UNTIL THE BASE MATERIALS HAVE BEEN INSPECTED BY THE CARRIER CONSTRUCTION SUPERVISOR.
5. BACKFILL:
   A. FILL AND BACKFILL SHALL BE COMPACTED TO 95% OF MAX. DENSITY IN ACCORDANCE WITH ASTM TEST METHOD D–1557. FLOODING NOT PERMITTED.
   B. BACK FILL SHALL NOT BE PLACED SOONER THAN THE FOUNDATION OR RETAINING STRUCTURE HAS REACHED THE FULL DESIGN STRENGTH UNLESS OTHERWISE DIRECTED IN WRITING BY THE ENGINEER.
   C. PRIOR TO PLACING BACKFILL AROUND STRUCTURES, ALL FORMS SHALL HAVE BEEN REMOVED AND THE EXCAVATION CLEANED OF ALL TRASH, DEBRIS AND UNSUITABLE MATERIALS.
6. TRENCH EXCAVATION:
   A. UTILITY TRENCHES SHALL BE EXCAVATED TO THE LINES AND GRADES SHOWN ON THE DRAWINGS OR AS DIRECTED BY THE CARRIER CONSTRUCTION SUPERVISOR. PROVIDE SHORING, SHEETING AND BRACING AS REQUIRED TO PREVENT CAVING OR SLOUGHING OF THE TRENCH WALLS.
   B. THE TRENCH WIDTH EXTENDS A MINIMUM OF 6 INCHES BEYOND EACH OUTSIDE EDGE OF THE CONDUIT OR OUTERMOST CONDUIT, WHICHEVER IS APPLICABLE.
   C. WHEN SOFT, YIELDING OR OTHERWISE UNSTABLE SOIL CONDITIONS ARE ENCOUNTERED AT THE REQUIRED TRENCH BOTTOM ELEVATION, OVER–EXCAVATE THE TRENCH TO A DEPTH OF NO LESS THAN 12 INCHES BELOW THE REQUIRED ELEVATION AND BACKFILL WITH GRANULAR BEDDING MATERIAL.
7. TRENCH BACK FILL:
   A. PROVIDE GRANULAR BEDDING MATERIAL IN ACCORDANCE WITH THE SPECIFICATIONS, DRAWINGS AND THE UTILITY REQUIREMENTS, UNLESS OTHERWISE DIRECTED BY THE GEOTECHNICAL ENGINEER
   B. NOTIFY THE CARRIER CONSTRUCTION SUPERVISOR 24 HOURS IN ADVANCE OF BACK FILLING.
   C. CONDUCT UTILITY CHECK TESTS BEFORE BACK FILLING BACK FILL AND COMPACT TRENCH BEFORE ACCEPTANCE TESTING.
   D. PLACE GRANULAR TRENCH BACKFILL UNIFORMLY ON BOTH SIDES OF THE CONDUITS IN 6–INCH UNCOMPACTED LIFTS UNTIL 12 INCHES OVER THE CONDUITS. SOLIDLY RAM AND TAMP BACKFILL INTO SPACES AROUND THE CONDUITS.
   E. PROTECT CONDUIT FROM LATERAL MOVEMENT, DAMAGE FROM IMPACT OR UNBALANCED LOADING.
   F. ABOVE THE CONDUIT EMBEDMENT ZONE, PLACE AND COMPACT SATISFACTORY BACKFILL MATERIAL IN 9–INCH MAXIMUM LOOSE THICKNESS LIFTS TO RESTORE THE REQUIRED FINISHED SURFACE GRADE.
   G. COMPACT FINAL TRENCH BACKFILL TO A DENSITY EQUAL TO OR GREATER THAN THAT OF THE EXISTING UNDISTURBED MATERIAL IMMEDIATELY ADJACENT TO THE TRENCH BUT NO LESS THAN A MINIMUM OF 95% OF MAX. DENSITY IN ACCORDANCE WITH ASTM TEST METHOD D–1557.
8. AGGREGATE ACCESS ROAD:
   A. CLEAR, GRUB, STRIP AND EXCAVATE FOR THE ACCESS ROAD AND TOWER COMPOUND TO THE LINES AND GRADES INDICATED ON THE DRAWINGS. SCARIFY TO A DEPTH OF 6 INCHES AND PROOF–ROLL ALL HOLES, RUTS, SOFT PLACES AND OTHER DEFECTS.
   B. THE AGGREGATE SUB BASE AND BASE SHALL BE IMMEDIATELY COMPACTED TO 95% OF MAX. DENSITY IN ACCORDANCE WITH ASTM TEST METHOD D–1557.
   C. AFTER PREPARATION OF THE SUB GRADE IS COMPLETED, THE GEOTEXTILE FABRIC SHALL BE INSTALLED TO THE LIMITS INDICATED ON THE DRAWINGS BY ROLLING THE FABRIC OUT LONGITUDINALLY ALONG THE ROADWAY OR SITE. THE FABRIC SHALL NOT BE DRAGGED ACROSS THE SUB GRADE. PLACE THE ENTIRE ROLL IN A SINGLE OPERATION, ROLLING THE MATERIAL AS SMOOTHLY AS POSSIBLE.
      I. OVERLAPS PARALLEL TO THE ROADWAY AND SITE WILL BE PERMITTED AT THE CENTERLINE AND AT LOCATIONS BEYOND THE ROADWAY OR SITE SURFACE WIDTH (I.E. WITHIN THE SHOULDER WIDTH) ONLY. NO LONGITUDINAL OVERLAPS SHALL BE LOCATED BETWEEN THE CENTERLINE AND THE SHOULDER. PARALLEL OVERLAPS SHALL BE A MINIMUM OF 3 FEET WIDE.
      II. TRANSVERSE (PERPENDICULAR TO THE ROADWAY) OVERLAPS AT THE END OF A ROLL SHALL OVERLAP IN THE DIRECTION OF THE AGGREGATE PLACEMENT (PREVIOUS ROLL ON TOP) AND SHALL HAVE A MINIMUM LENGTH OF 3 FEET.
      III. ALL OVERLAPS SHALL BE PINNED WITH STAPLES OR NAILS BETWEEN 10 AND 12 INCHES LONG TO ENSURE STABLE POSITIONING DURING THE PLACEMENT OF AGGREGATE. PIN LONGITUDINAL SEAMS AT 25–FOOT CENTERS AND TRANSVERSE SEAMS EVERY 5 FEET ON CENTER.
   D. THE AGGREGATE SUB BASE, BASE AND SURFACE COURSES SHALL BE CONSTRUCTED IN LAYERS NOT MORE THAN 4 INCHES (COMPACTED) THICKNESS. AGGREGATE TO BE PLACED ON GEOTEXTILE FABRIC SHALL BE END–DUMPED ON THE FABRIC FROM THE FREE END OF THE FABRIC OR OVER PREVIOUSLY PLACED AGGREGATE. AT NO TIME SHALL EQUIPMENT, EITHER DUMPING THE AGGREGATE OR GRADING THE AGGREGATE, BE PERMITTED ON THE ROADWAY OR COMPOUND WITH LESS THAN 8 INCHES OF MATERIAL COVERING THE FABRIC.
9. FINISH GRADING
   A. PERFORM ALL FINISHED GRADING TO PROVIDE SMOOTH, EVEN SURFACE AND SUBSURFACE DRAINAGE OF THE ENTIRE AREA WITHIN THE LIMITS OF CONSTRUCTION. GRADING SHALL BE COMPATIBLE WITH ALL SURROUNDING TOPOGRAPHY AND STRUCTURES.
   B. UTILIZE SATISFACTORY FILL MATERIALS RESULTING FROM THE EXCAVATION WORK IN THE CONSTRUCTION OF FILLS, EMBANKMENTS AND FOR THE REPLACEMENT OF REMOVED UNSUITABLE MATERIALS.
   C. REPAIR ALL ACCESS ROADS AND SURROUNDING AREAS USED DURING THE COURSE OF THIS WORK TO THEIR ORIGINAL CONDITION.

CONCRETE REINFORCING STEEL

1. REINFORCING STEEL FOR CONCRETE SHALL BE DEFORMED STEEL CONFORMING TO THE REQUIREMENTS OF ASTM A–615, (DEFORMATIONS SHALL BE IN ACCORDANCE WITH ASTM A 305 AS FOLLOWS:

   GRADE 60: (#4 BARS AND LARGER)

   GRADE 40: (#3 BARS)

   THE ACTUAL YIELD STRENGTH BASED ON MILL TESTS SHALL NOT EXCEED THE SPECIFIED YIELD STRENGTH BY MORE THAN 18,000 PSI (RETESTS SHALL NOT EXCEED THIS VALUE BY MORE THAN AN ADDITIONAL 3000PSI) AND THE RATIO OF THE ACTUAL ULTIMATE TENSILE STRESS TO ACTUAL YIELD STRENGTH SHALL NOT BE LESS THAN 1.25.
2. WWF SHALL CONFORM TO ASTM A 82 AND ASTM A 185. LAP 1 1/2 SPACES (9" MIN.)
3. DETAILING, FABRICATION, AND ERECTION OF REINFORCING BARS SHALL CONFORM TO A.C.I. "MANUAL OF STANDARD PRACTICE FOR DETAILING REINFORCING CONCRETE STRUCTURES."
4. MIN. COVER FOR CAST–IN–PLACE CONCRETE SHALL BE AS FOLLOWS:

   CAST AGAINST EARTH ..... 3"

   CAST AGAINST FORM BELOW GRADE ..... 2"

   FORMED SLABS (#11 BAR & SMALLER) ..... 3/4"

   SLABS ON GRADE (FROM TOP OF SLAB) ..... 1"

   COLUMNS AND BEAMS (MAIN BARS) ..... 2"

   WALLS EXPOSED TO WEATHER (#6 – #18 BARS) ..... 2"
   (#5 & SMALLER) .....1 1/2"

   NOT EXPOSED TO WEATHER (#11 & SMALLER) ..... 3/4"

5. BARS SHALL BE CLEAN OF RUST, GREASE OR OTHER MATERIAL LIKELY TO IMPAIR BOND. BEND SHALL BE MADE COLD.
6. PRIOR TO PLACING OF CONCRETE, REINFORCING STEEL AND EMBEDDED ITEMS SHALL BE WELL SECURED IN POSITION.
7. WHEN WELDING OF REINFORCING BARS IS REQUIRED, IN ADDITION TO THE REQUIREMENTS OF ASTM A–615, A REPORT OF MATERIAL PROPERTIES SHALL BE PROVIDED BY THE REINFORCING MANUFACTURER TO VERIFY THAT MATERIAL PROPERTIES ARE THOSE NECESSARY FOR CONFORMANCE WITH WELDING PROCEDURES SPECIFIED IN AWS D1.4, "STRUCTURAL WELDING CODE – REINFORCING STEEL". IN LIEU OF SUPPLYING A SUPPLEMENTAL REPORT, BARS CONFORMING TO ASTM A–706 MAY BE USED. E90XX ELECTRODES SHALL BE USED TO WELD REINFORCING BARS.
8. WHEN REQUIRED, CONTINUOUS INSPECTION OF CONCRETE SHALL INCLUDE INSPECTION OF REINFORCING STEEL IN ACCORDANCE WITH THE REQUIREMENTS OF IBC TABLE 1705.3 AS PRESENTED ON VERIFICATION AND INSPECTION NOTES AND TABLES – SEE SPECIAL INSPECTION NOTES. INSPECTION SHALL BE SCHEDULED SO THAT PLACEMENT OF REINFORCING STEEL, CONDUIT, SLEEVES, AND EMBEDDED ITEMS MAY BE CORRECTED PRIOR TO PLACEMENT OF OVERLYING GRIDS OF REINFORCING STEEL.
9. FOR STANDARD REBAR HOOKS, REFER TO THE STANDARD HOOK DETAIL CONTAINED HEREIN, AND FOR STANDARD REBAR SPLICE REQUIREMENTS, REFER TO THE STANDARD REBAR SPLICE DETAIL CONTAINED HEREIN.

T-Mobile

AMERICAN TOWER®

POWDER RIVER
Engineering Services, LLC
www.powderriverdev.com

BUSINESS LICENSE #: 3004

REVISIONS

REV	DATE	DESCRIPTION	INT
0	08/13/18	100% CONSTRUCTION	JPN
A	06/14/18	ISSUED FOR REVIEW 90%	SDA

8813 REGISTERED ARCHITECT
GLENN WALKER
STATE OF WASHINGTON
08/13/18

THESE PLANS AND SPECIFICATIONS, AS INSTRUMENTS OF SERVICE, ARE AND SHALL REMAIN THE PROPERTY OF POWDER RIVER DEVELOPMENT SERVICES, LLC WHETHER THE PROJECTS FOR WHICH THEY ARE MADE ARE EXECUTED OR NOT. THESE DRAWINGS AND SPECIFICATIONS SHALL NOT BE USED BY ANY PERSON OR ENTITY ON OTHER PROJECTS WITHOUT PRIOR WRITTEN CONSENT OF THE ENGINEER.

SITE INFORMATION

T-MOBILE #: PO02600A

ATC #: 310444

184 RATTLESNAKE RD.
CENTERVILLE, WA
98613

SHEET TITLE:

GENERAL NOTES

SHEET NUMBER:

GN-3

THE INFORMATION CONTAINED IN THIS SET OF CONSTRUCTION DOCUMENTS IS PROPRIETARY BY NATURE. ANY USE OR DISCLOSURE OTHER THAN THAT WHICH RELATES TO CARRIER SERVICES IS STRICTLY PROHIBITED.

STRUCTURAL STEEL AND WELDING

1. ALL STRUCTURAL AND MISCELLANEOUS STEEL SHALL BE FABRICATED AND ERECTED IN ACCORDANCE WITH THE AISC STEEL CONSTRUCTION MANUAL, LATEST EDITION.
2. STRUCTURAL SHAPES AND PLATES SHALL CONFORM TO THE FOLLOWING U.N.O.:

W AND WT SHAPES	ASTM A 992
PIPE	ASTM A 53, GRADE B
HSS	ASTM A 500, GRADE B
C / MC / M / S / HP SHAPES	ASTM A 36
ANGLES AND PLATES	ASTM A 36
HEADED STUDS	ASTM A 108

3. ERECTION AND SHOP DETAIL DRAWINGS SHALL BE SUBMITTED TO THE ENGINEER FOR REVIEW PRIOR TO FABRICATION AND ERECTION. SUBMIT TWO SETS FOR REVIEW.
4. MACHINE BOLTS CONFORMING TO ASTM A 307 SHALL BE USED ONLY WHERE NOTED; NUTS SHALL CONFORM TO ASTM A 563.
5. ALL STRUCTURAL BOLTS SHALL BE 7/8" ø CONFORMING TO ASTM A 325-N, PRETENSIONING NOT REQUIRED U.N.O.
6. HIGH STRENGTH BOLTS NOTED AS "SC" SHALL BE INSTALLED AND PRE-TENSIONED PER THE AISC REQUIREMENTS FOR SLIP CRITICAL CONNECTIONS.
7. HIGH STRENGTH BOLTS NOTED AS "PT" HAVE BEEN DESIGNED WITH THE ALLOWABLE VALUES FOR TYPE "N" BEARING CONNECTIONS AND SHALL BE PRETENSIONED PER THE AISC REQUIREMENTS FOR PRE-TENSIONED BOLTS.
8. HIGH STRENGTH BOLTS SHALL BE INSTALLED IN ACCORDANCE WITH THE REQUIREMENTS OF THE AISC SPECIFICATION FOR STRUCTURAL JOINTS USING ASTM A 325 OR A 490 BOLTS, LATEST EDITION.
9. ALL WELDING SHALL COMPLY WITH AWS D1.1 AND SHALL BE DONE BY WELDERS CERTIFIED FOR THE TYPE OF WELDING TO BE PERFORMED. WELDING OF REBAR SHALL CONFORM TO AWS D1.4.
10. ALL WELDS USED ON STRUCTURAL MEMBERS AND CONNECTIONS SHALL BE DONE WITH E70XX ELECTRODES OR E7XT-X WIRE THAT CAN PRODUCE WELDS WITH A MINIMUM CHARPY V-NOTCH TOUGHNESS OF 20 FT-LBS @ 0° F, AS DETERMINED BY THE APPROPRIATE AWS CLASSIFICATION TEST METHOD OR MANUFACTURER CERTIFICATION.
11. WHERE WELDS SHOWN ON THE DESIGN DRAWINGS ARE DESIGNATED AS "DEMAND CRITICAL", THE E70XX ELECTRODES OR E7XT-X WIRE MUST PROVIDE A MINIMUM CHARPY V-NOTCH TOUGHNESS OF 20 FT-LBS @ -20° F AS DETERMINED BY THE APPROPRIATE AWS CLASSIFICATION TEST METHOD OR MANUFACTURER CERTIFICATION AND 40 FT-LBS @ 70° F AS DETERMINED BY AISC SEISMIC DESIGN MANUAL, APPENDIX X OR OTHER APPROVED METHOD.
12. ELECTRODES FOR WELDING OF METAL DECKS MAY CONFORM TO E60XX.
13. ALL WELDING SHALL BE DONE EITHER IN THE SHOP OF A FABRICATOR REGISTERED AND APPROVED TO PERFORM SUCH WORK WITHOUT SPECIAL INSPECTION PER IBC SECTION 1704.2.5.1 OR WITH SPECIAL INSPECTION PER ANSI/AISC 360-10 CHAPTER N, AND ANSI/AISC 341-10 CHAPTER J AS PRESENTED ON VERIFICATION AND INSPECTION NOTES AND TABLES – SEE SPECIAL INSPECTION NOTES.
14. ALL SPECIAL INSPECTIONS FOR STRUCTURAL AND MISCELLANEOUS STEEL AND THE FREQUENCY OF INSPECTION SHALL BE AS REQUIRED BY ANSI/AISC 360-10 CHAPTER N, AND ANSI/AISC 341-10 CHAPTER J AS PRESENTED ON VERIFICATION AND INSPECTION NOTES AND TABLES – SEE SPECIAL INSPECTION NOTES.
15. ALL STRUCTURAL STEEL IN THE SEISMIC LOAD RESISTING SYSTEM SHALL BE FABRICATED AND ERECTED IN ACCORDANCE WITH THE AISC SEISMIC PROVISIONS FOR STRUCTURAL STEEL BUILDINGS, LATEST EDITION. SEE ADDITIONAL NOTES WHERE APPLICABLE.
16. EXCEPT WHERE NOTED, ALL CARBON STEEL MEMBERS SHALL BE PAINTED WITH PRIME COAT PER THE AISC CODE OF STANDARD PRACTICE FOR STEEL BUILDINGS AND BRIDGES AND THE STEEL CONSTRUCTION MANUAL. THE EXCEPTION FOR STEELWORK CONCEALED BY INTERIOR BUILDING FINISH SHALL NOT BE APPLICABLE. STEELWORK NOTED TO BE GALVANIZED SHALL BE HOT-DIPPED GALVANIZED PER ASTM A 123 AND, IF DAMAGED, SHALL BE TOUCHED UP WITH GALVANOX, AS MANUFACTURED BY CARBOLINE COMPANY, OR APPROVED EQUIVALENT.

T-Mobile

AMERICAN TOWER®

POWDER RIVER
Engineering Services, LLC
www.powderriverdev.com

BUSINESS LICENSE #: 3004

REVISIONS

REV	DATE	DESCRIPTION	INT
0	08/13/18	100% CONSTRUCTION	JPN
A	06/14/18	ISSUED FOR REVIEW 90%	SDA

8813
REGISTERED ARCHITECT
GLENN WALKER
STATE OF WASHINGTON
08/13/18

THESE PLANS AND SPECIFICATIONS, AS INSTRUMENTS OF SERVICE, ARE AND SHALL REMAIN THE PROPERTY OF POWDER RIVER DEVELOPMENT SERVICES, LLC WHETHER THE PROJECTS FOR WHICH THEY ARE MADE ARE EXECUTED OR NOT. THESE DRAWINGS AND SPECIFICATIONS SHALL NOT BE USED BY ANY PERSON OR ENTITY ON OTHER PROJECTS WITHOUT PRIOR WRITTEN CONSENT OF THE ENGINEER.

SITE INFORMATION

T-MOBILE #: PO02600A

ATC #: 310444

184 RATTLESNAKE RD.
CENTERVILLE, WA
98613

SHEET TITLE:

GENERAL NOTES

SHEET NUMBER:

GN-4

THE INFORMATION CONTAINED IN THIS SET OF CONSTRUCTION DOCUMENTS IS PROPRIETARY BY NATURE. ANY USE OR DISCLOSURE OTHER THAN THAT WHICH RELATES TO CARRIER SERVICES IS STRICTLY PROHIBITED.

DISCLAIMER:

THESE DRAWINGS WERE PRODUCED WITHOUT THE BENEFIT OF A CURRENT LAND SURVEY. ALL PROPERTY LINES, EASEMENTS, SETBACKS, AND DIMENSIONS SHOWN SHALL BE VERIFIED PRIOR TO START OF CONSTRUCTION. POWDER RIVER DEVELOPMENT SERVICES, LLC. DOES NOT GUARANTEE THE ACCURACY OF SAID PROPERTY LINES, EASEMENTS, SETBACKS, AND DIMENSIONS SHOWN.

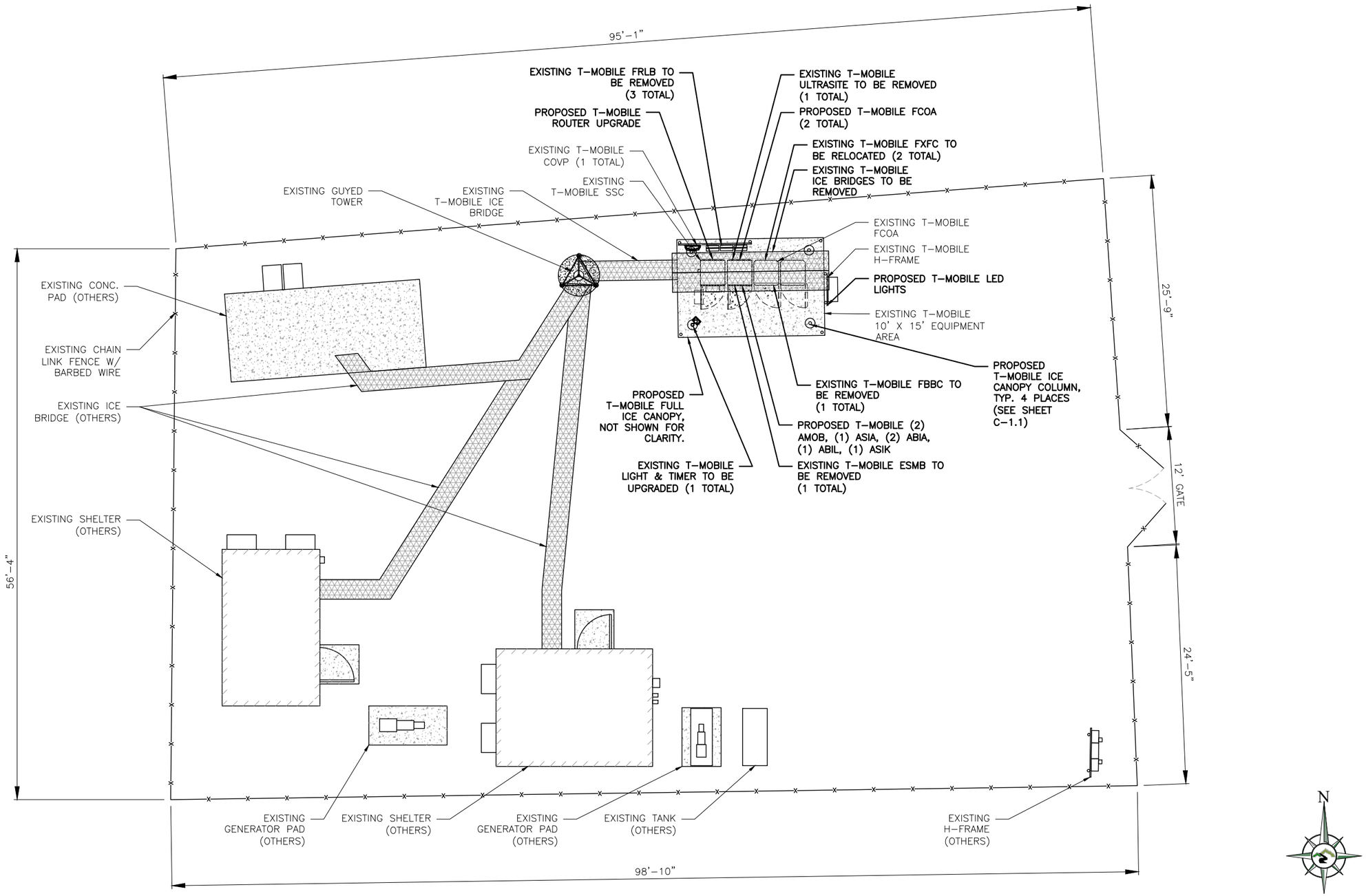

SITE PLAN

SCALE: 3/32" = 1'-0" (11x17)

1

THE INFORMATION CONTAINED IN THIS SET OF CONSTRUCTION DOCUMENTS IS PROPRIETARY BY NATURE. ANY USE OR DISCLOSURE OTHER THAN THAT WHICH RELATES TO CARRIER SERVICES IS STRICTLY PROHIBITED.

T-Mobile

AMERICAN TOWER®

POWDER RIVER
Engineering Services, LLC
www.powderriverdev.com

BUSINESS LICENSE #: 3004

REVISIONS

REV	DATE	DESCRIPTION	INT
0	08/13/18	100% CONSTRUCTION	JPN
A	06/14/18	ISSUED FOR REVIEW 90%	SDA

8813
REGISTERED ARCHITECT
GLENN WALKER
STATE OF WASHINGTON
08/13/18

THESE PLANS AND SPECIFICATIONS, AS INSTRUMENTS OF SERVICE, ARE AND SHALL REMAIN THE PROPERTY OF POWDER RIVER DEVELOPMENT SERVICES, LLC WHETHER THE PROJECTS FOR WHICH THEY ARE MADE ARE EXECUTED OR NOT. THESE DRAWINGS AND SPECIFICATIONS SHALL NOT BE USED BY ANY PERSON OR ENTITY ON OTHER PROJECTS WITHOUT PRIOR WRITTEN CONSENT OF THE ENGINEER.

SITE INFORMATION

T-MOBILE #: PO02600A

ATC #: 310444

184 RATTLESNAKE RD.
CENTERVILLE, WA
98613

SHEET TITLE:

SITE PLAN

SHEET NUMBER:

C-1

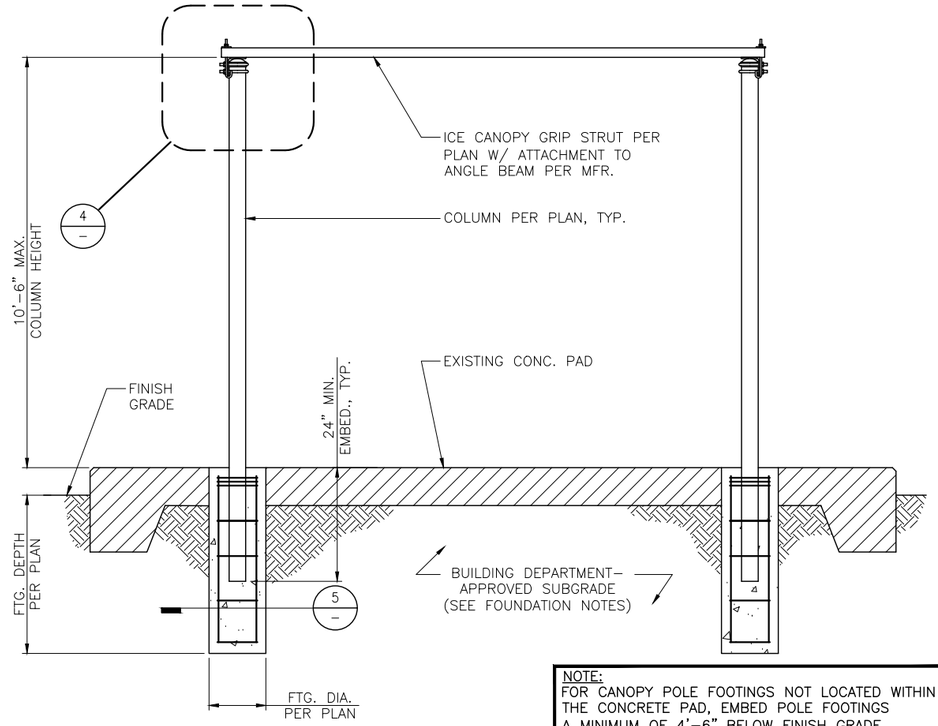

NOTE:
FOR CANOPY POLE FOOTINGS NOT LOCATED WITHIN THE CONCRETE PAD, EMBED POLE FOOTINGS A MINIMUM OF 4'-6" BELOW FINISH GRADE.

CANOPY ELEVATION | SCALE: N.T.S. | 3

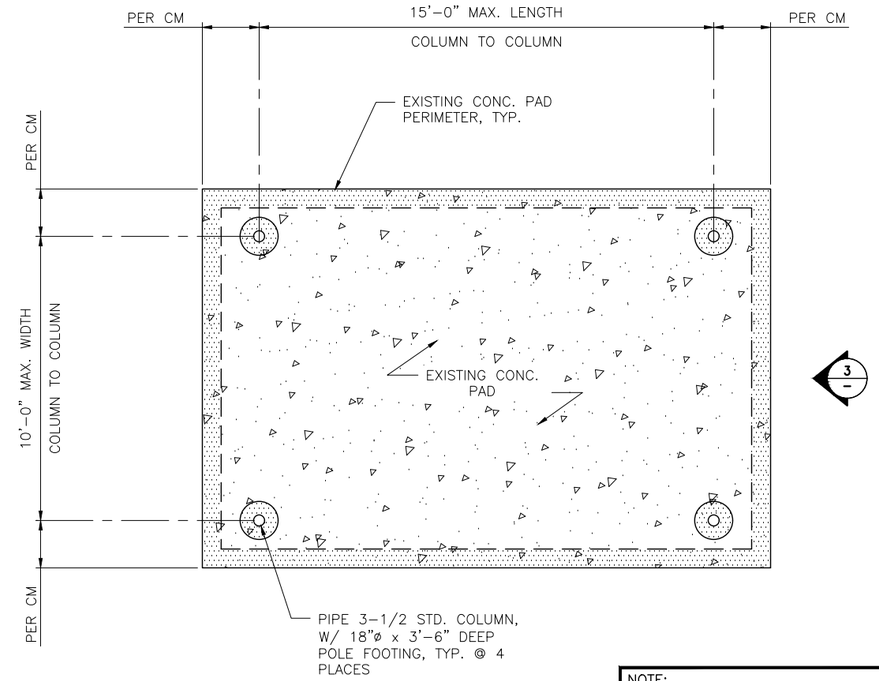

NOTE:
ALL STEEL COMPONENTS TO BE HOT-DIPPED GALVANIZED, U.N.O.

CANOPY FOUNDATION PLAN | SCALE: N.T.S. | 1

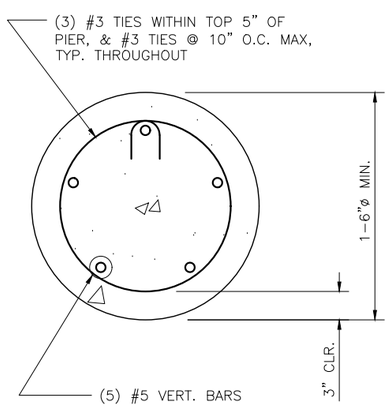

POLE FOOTING SECTION | SCALE: N.T.S. | 5

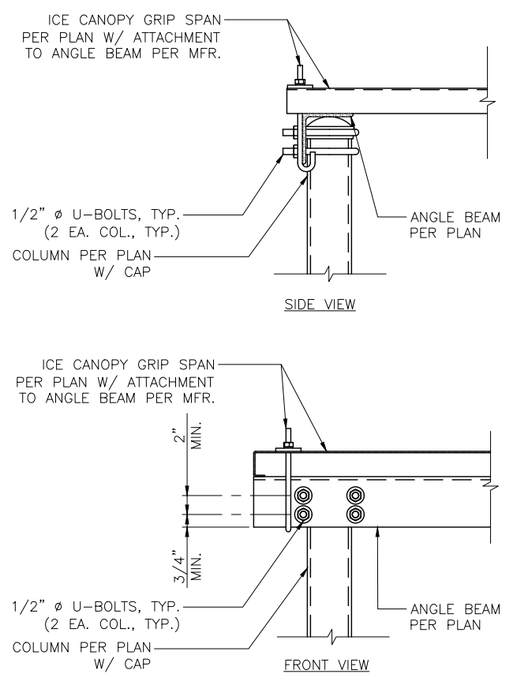

COLUMN TO BEAM CONNECTION | SCALE: N.T.S. | 4

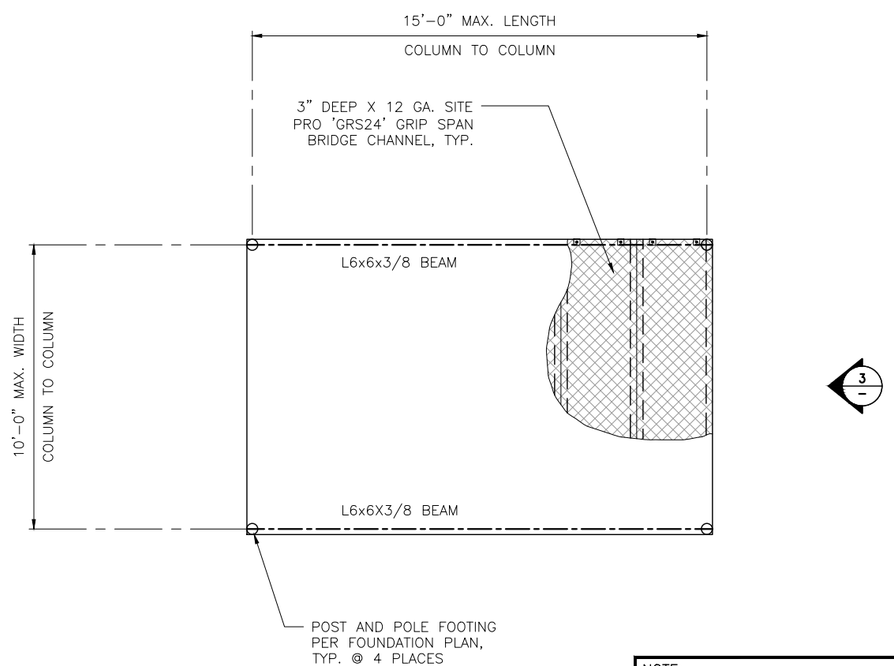

NOTE:
ALL STEEL COMPONENTS TO BE HOT-DIPPED GALVANIZED, U.N.O.

CANOPY FRAMING PLAN | SCALE: N.T.S. | 2

T-Mobile

AMERICAN TOWER®

POWDER RIVER
Engineering Services, LLC
www.powderriverdev.com

BUSINESS LICENSE #: 3004

REVISIONS

REV	DATE	DESCRIPTION	INT
0	08/13/18	100% CONSTRUCTION	JPN
A	06/14/18	ISSUED FOR REVIEW 90%	SDA

8813
REGISTERED ARCHITECT
GLENN WALKER
STATE OF WASHINGTON
08/13/18

THESE PLANS AND SPECIFICATIONS, AS INSTRUMENTS OF SERVICE, ARE AND SHALL REMAIN THE PROPERTY OF POWDER RIVER DEVELOPMENT SERVICES, LLC WHETHER THE PROJECTS FOR WHICH THEY ARE MADE ARE EXECUTED OR NOT. THESE DRAWINGS AND SPECIFICATIONS SHALL NOT BE USED BY ANY PERSON OR ENTITY ON OTHER PROJECTS WITHOUT PRIOR WRITTEN CONSENT OF THE ENGINEER.

SITE INFORMATION

T-MOBILE #: PO02600A

ATC #: 310444

184 RATTLESNAKE RD.
CENTERVILLE, WA
98613

SHEET TITLE:
ICE CANOPY DETAIL

SHEET NUMBER:
C-1.1

THE INFORMATION CONTAINED IN THIS SET OF CONSTRUCTION DOCUMENTS IS PROPRIETARY BY NATURE. ANY USE OR DISCLOSURE OTHER THAN THAT WHICH RELATES TO CARRIER SERVICES IS STRICTLY PROHIBITED.

EXISTING T–MOBILE APPURTENANCE LIST:

(2) ANTENNA SECTOR FRAMES
(1) TMA
(6) DUAL PORT ANTENNAS
(12) COAX CABLES
(2) MICROWAVES
(2) ODU

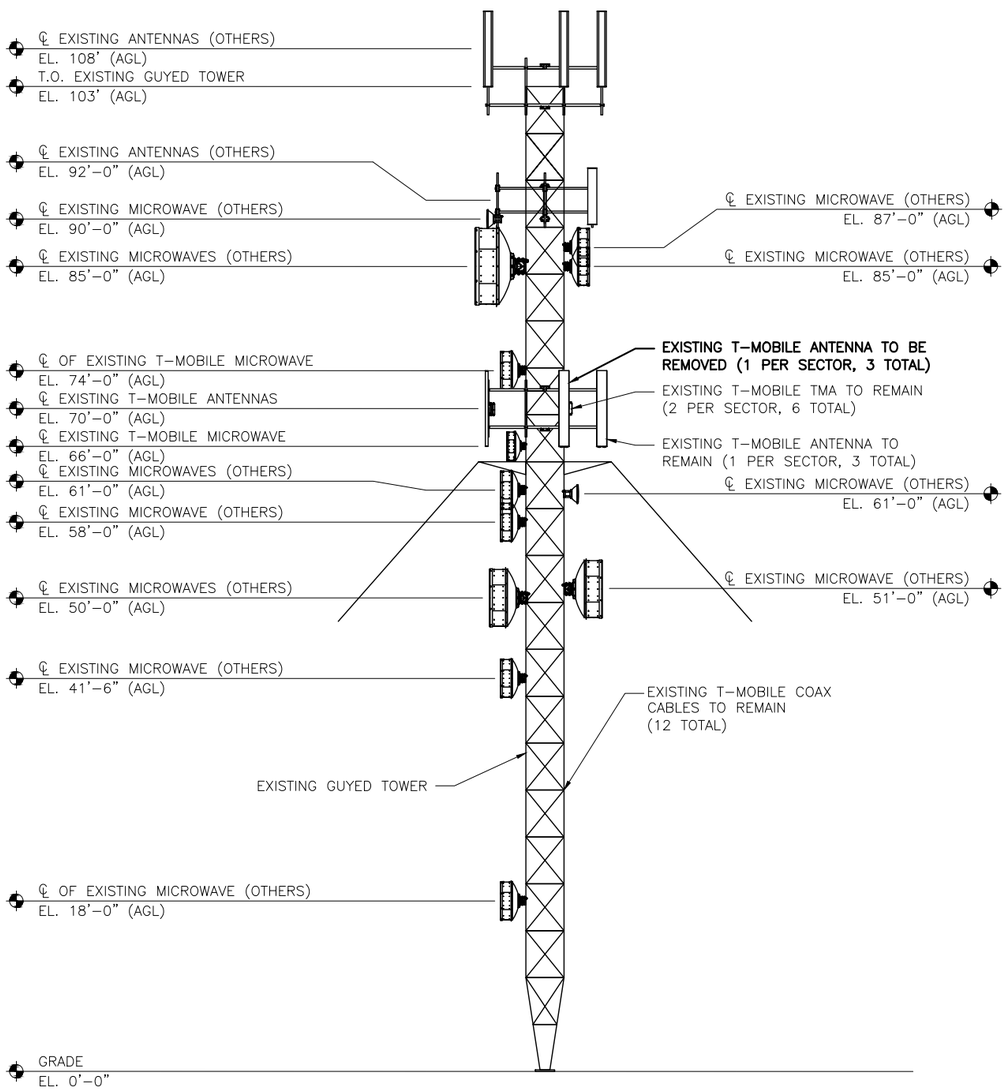

TOWER ELEVATION (EXISTING) | SCALE: 1/16" = 1'-0" (11x17) | 2

FINAL T–MOBILE APPURTENANCE LIST:

(2) ANTENNA SECTOR FRAMES
(1) TMA
(3) DUAL PORT ANTENNAS
(12) COAX CABLES
(2) MICROWAVES
(2) ODU
(3) OCTA PORT ANTENNAS
(3) AHLOA
(2) FXFC
(1) COVP
(1) HYBRID CABLE

POWDER RIVER ENGINEERING SERVICES HAS NOT PERFORMED STRUCTURAL ANALYSES FOR THE NEW EQUIPMENT MOUNTS, NOR THE SUPPORTING STRUCTURE, AND ASSUMES NO RESPONSIBILITY FOR ITS ABILITY TO SUPPORT THE PROPOSED MODIFICATIONS. PRIOR TO CONSTRUCTION, STRUCTURAL ANALYSIS (BY OTHERS) SHALL BE PERFORMED FOR ALL TOWERS, ROOFTOPS, FLAGPOLES, LIGHT POLES AND ASSOCIATED EQUIPMENT MOUNTS.

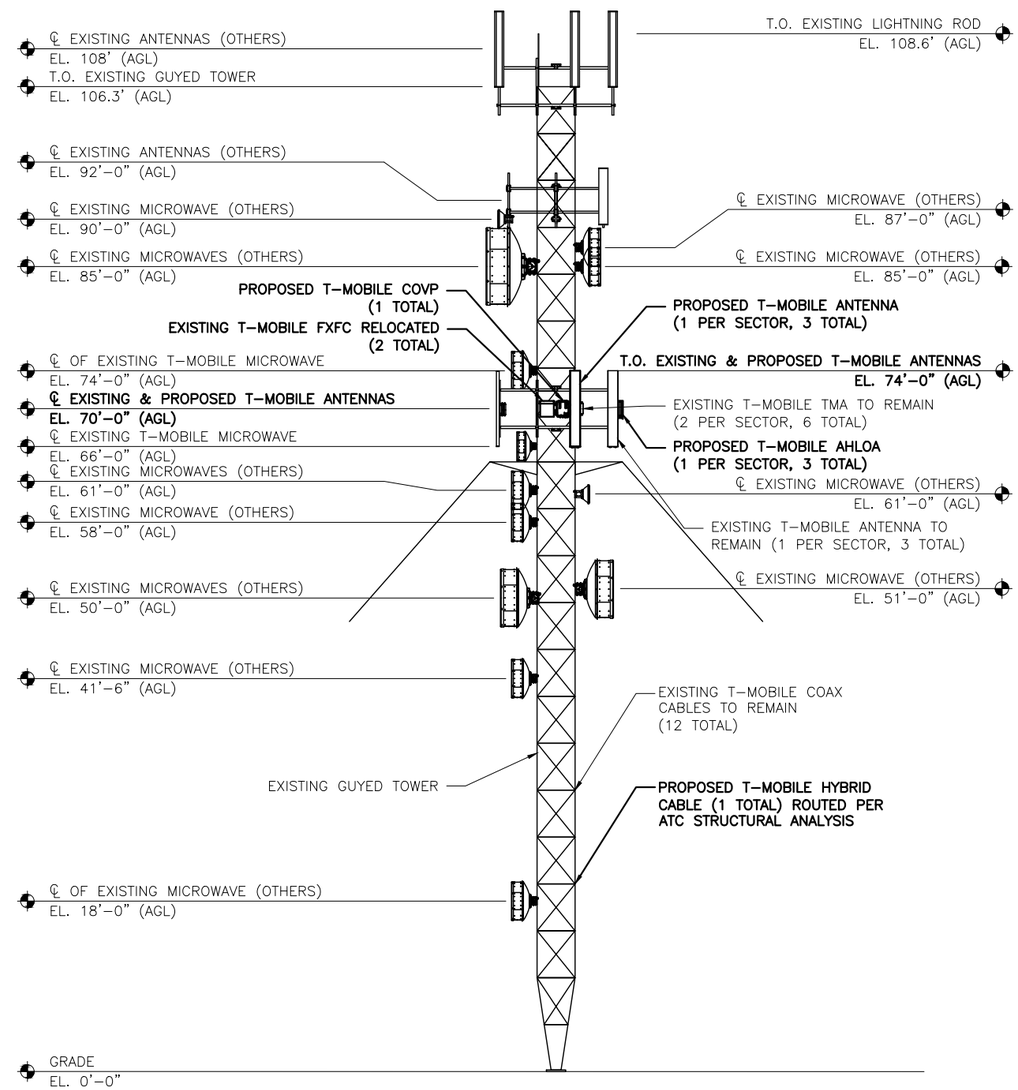

TOWER ELEVATION (PROPOSED) | SCALE: 1/16" = 1'-0" (11x17) | 1

T-Mobile

AMERICAN TOWER®

POWDER RIVER
Engineering Services, LLC
www.powderriverdev.com

BUSINESS LICENSE #: 3004

REVISIONS

REV	DATE	DESCRIPTION	INT
0	08/13/18	100% CONSTRUCTION	JPN
A	06/14/18	ISSUED FOR REVIEW 90%	SDA

8813 REGISTERED ARCHITECT
GLENN WALKER
STATE OF WASHINGTON
08/13/18

THESE PLANS AND SPECIFICATIONS, AS INSTRUMENTS OF SERVICE, ARE AND SHALL REMAIN THE PROPERTY OF POWDER RIVER DEVELOPMENT SERVICES, LLC WHETHER THE PROJECTS FOR WHICH THEY ARE MADE ARE EXECUTED OR NOT. THESE DRAWINGS AND SPECIFICATIONS SHALL NOT BE USED BY ANY PERSON OR ENTITY ON OTHER PROJECTS WITHOUT PRIOR WRITTEN CONSENT OF THE ENGINEER.

SITE INFORMATION

T-MOBILE #: PO02600A

ATC #: 310444

**184 RATTLESNAKE RD.
CENTERVILLE, WA
98613**

SHEET TITLE:

ELEVATIONS

SHEET NUMBER:

C-2

THE INFORMATION CONTAINED IN THIS SET OF CONSTRUCTION DOCUMENTS IS PROPRIETARY BY NATURE. ANY USE OR DISCLOSURE OTHER THAN THAT WHICH RELATES TO CARRIER SERVICES IS STRICTLY PROHIBITED.

POWDER RIVER ENGINEERING SERVICES HAS NOT PERFORMED STRUCTURAL ANALYSES FOR THE NEW EQUIPMENT MOUNTS, NOR THE SUPPORTING STRUCTURE, AND ASSUMES NO RESPONSIBILITY FOR ITS ABILITY TO SUPPORT THE PROPOSED MODIFICATIONS. PRIOR TO CONSTRUCTION, STRUCTURAL ANALYSIS (BY OTHERS) SHALL BE PERFORMED FOR ALL TOWERS, ROOFTOPS, FLAGPOLES, LIGHT POLES AND ASSOCIATED EQUIPMENT MOUNTS.

ANTENNA SCHEDULE						
SECTOR	ALPHA (RED)		BETA (GREEN)		GAMMA (BLUE)	
ANTENNA POSITION	**A1**	A2	**B1**	B2	**G1**	G2
ANTENNA TYPE	**L600/L700/L19/G19**		**L600/L700/L19/G19**		**L600/L700/L19/G19**	
AZIMUTH	**30°**	30°	**150°**	150°	**255°**	255°
RAD CENTER (AGL)	**70'–0"**	70'–0"	**70'–0"**	70'–0"	**70'–0"**	70'–0"
MODEL	**COMMSCOPE FFHH–65C–R3**	ANDREW TMBX–6517–R2M	**COMMSCOPE FFHH–65C–R3**	ANDREW TMBX–6517–R2M	**COMMSCOPE FFHH–65C–R3**	ANDREW TMBX–6517–R2M
CABLE LENGTH	±100'–0"					

ANTENNA SCHEDULE (PROPOSED) 1

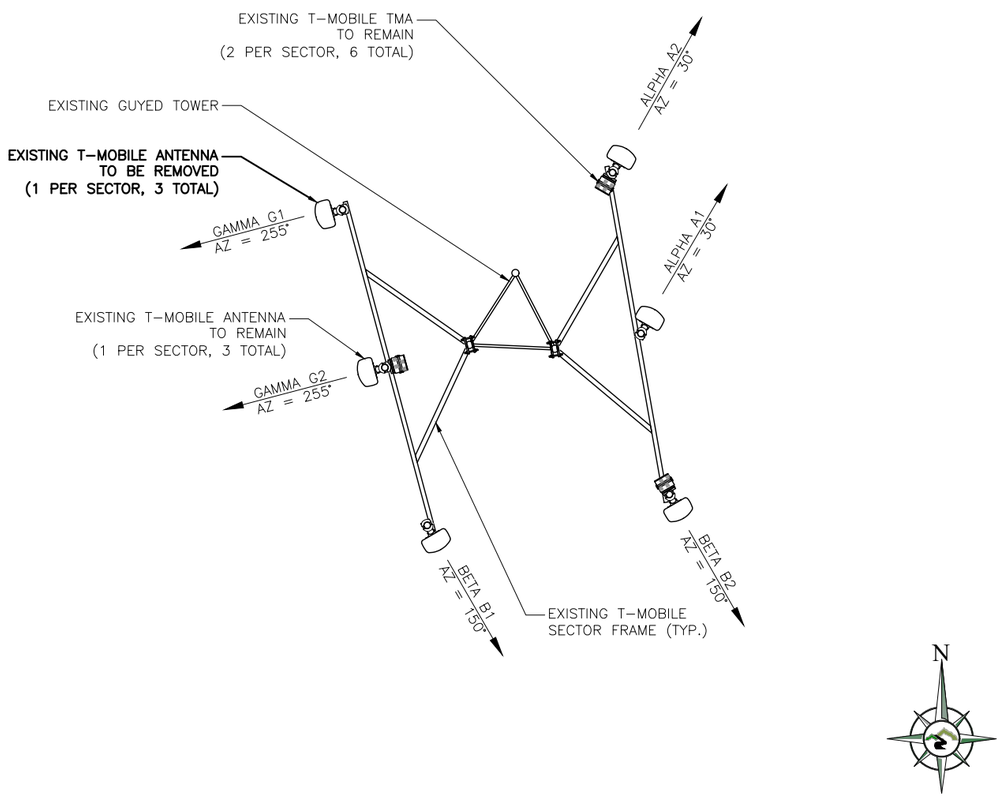

ANTENNA PLAN (EXISTING) SCALE: N.T.S. 3

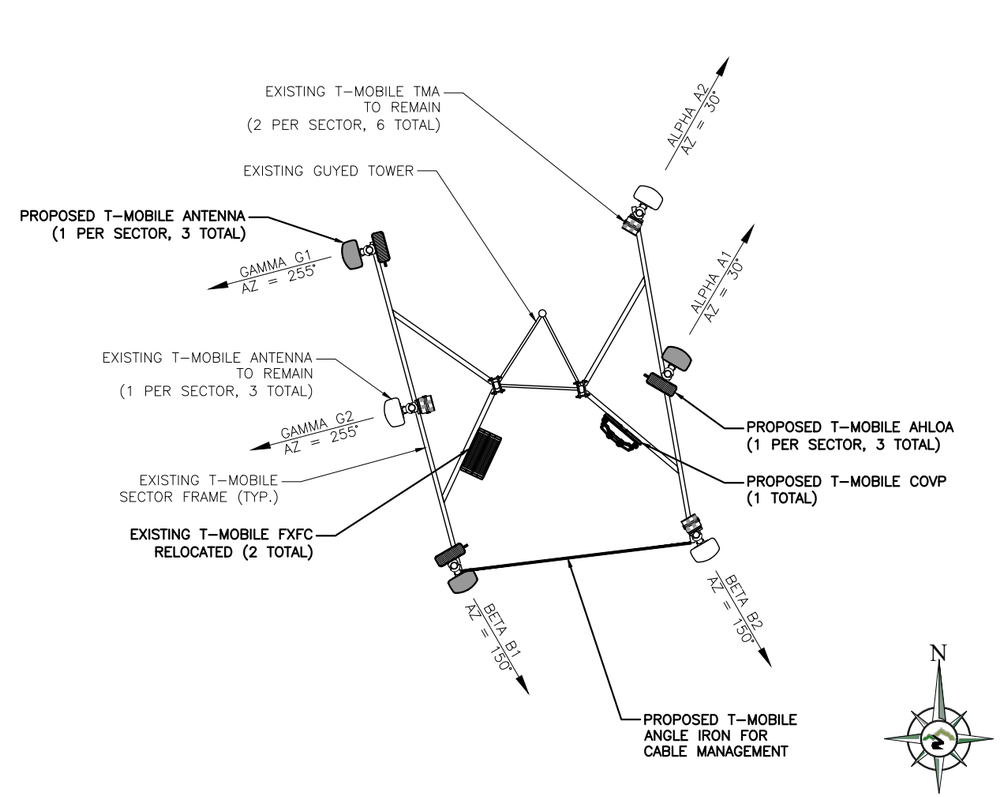

ANTENNA PLAN (PROPOSED) SCALE: N.T.S. 2

T-Mobile

AMERICAN TOWER®

POWDER RIVER Engineering Services, LLC www.powderriverdev.com

BUSINESS LICENSE #: 3004

REVISIONS

REV	DATE	DESCRIPTION	INT
0	08/13/18	100% CONSTRUCTION	JPN
A	06/14/18	ISSUED FOR REVIEW 90%	SDA

8813 REGISTERED ARCHITECT GLENN WALKER STATE OF WASHINGTON 08/13/18

THESE PLANS AND SPECIFICATIONS, AS INSTRUMENTS OF SERVICE, ARE AND SHALL REMAIN THE PROPERTY OF POWDER RIVER DEVELOPMENT SERVICES, LLC WHETHER THE PROJECTS FOR WHICH THEY ARE MADE ARE EXECUTED OR NOT. THESE DRAWINGS AND SPECIFICATIONS SHALL NOT BE USED BY ANY PERSON OR ENTITY ON OTHER PROJECTS WITHOUT PRIOR WRITTEN CONSENT OF THE ENGINEER.

SITE INFORMATION

T-MOBILE #: PO02600A

ATC #: 310444

184 RATTLESNAKE RD.
CENTERVILLE, WA
98613

SHEET TITLE:

ANTENNA PLANS

SHEET NUMBER:

C-3

THE INFORMATION CONTAINED IN THIS SET OF CONSTRUCTION DOCUMENTS IS PROPRIETARY BY NATURE. ANY USE OR DISCLOSURE OTHER THAN THAT WHICH RELATES TO CARRIER SERVICES IS STRICTLY PROHIBITED.

Section 3 - Proposed Template Images

6700C_R4_Unused.png

Configuration 6700C_R4

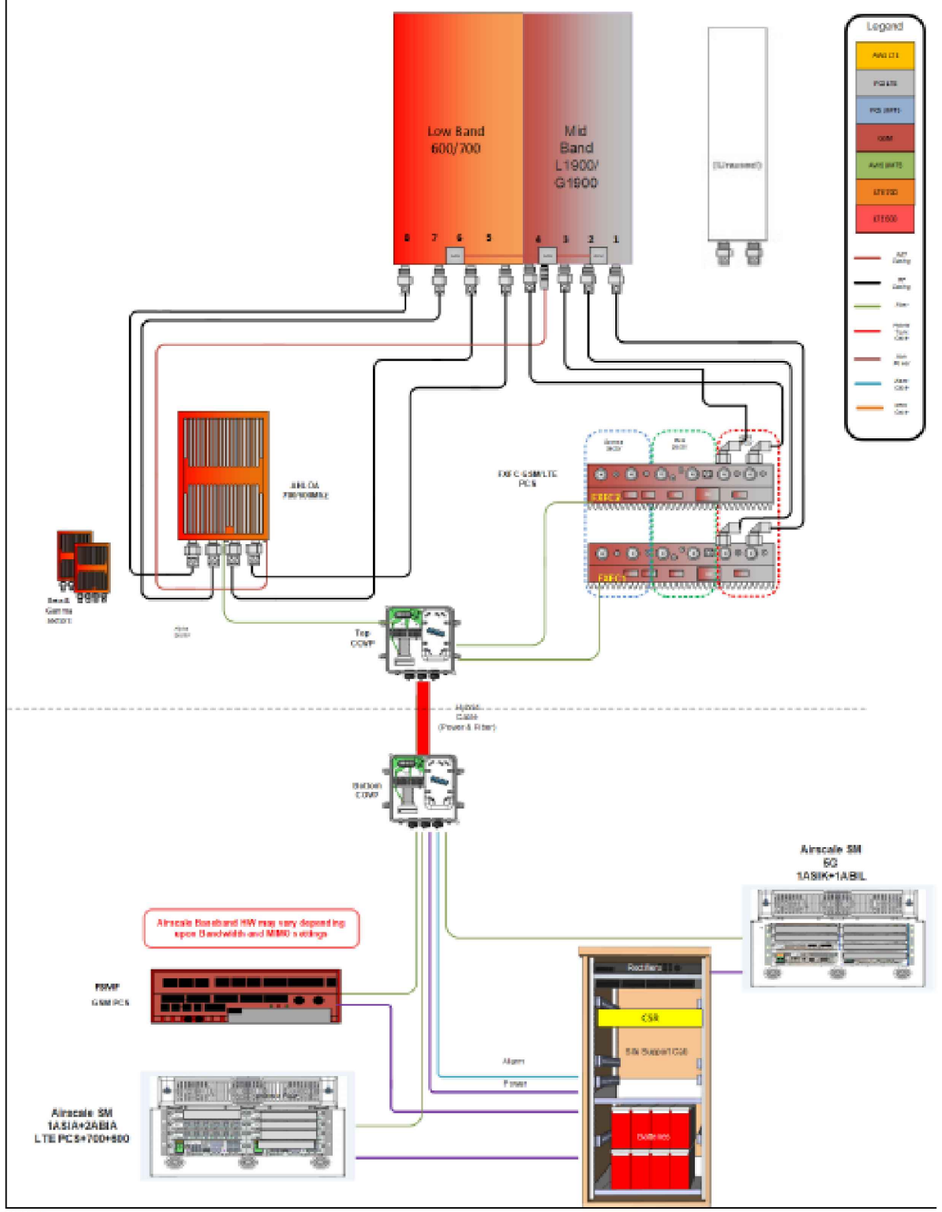

Notes:

RF CONFIGURATION (PROVIDED BY T-MOBILE) | 2

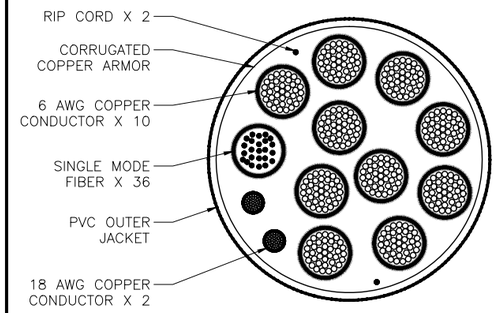

CABLE TYPE	NUMBER, SIZE (AWG)	10/C #6 + 2/C #18
	VOLTAGE	600
	OUTER JACKET	PVC
	SHIELDING	CORRUGATED COPPER
	MAX SHIELD RESISTANCE (OHM/FT @ 20° C	0.0035
	DRAIN	N/A
	RIPCORD	KEVLAR
	DC CONDUCTOR MATERIAL	COPPER
	DC CONDUCTOR SIZE (AWG)	6
	MAX DC RESISTANCE (OHM/1000FT)	0.411 @ 20° C
	COLOR CODE	BLACK/RED
	ALARM CONDUCTOR MATERIAL	COPPER
	ALARM CONDUCTOR SIZE (AWG)	18
	MAX DC RESISTANCE (OHM/1000FT)	6.7
	COLOR CODE	TBD
	FIBER CABLES	YES
	OUTER DIAMETER (IN) – NOMINAL	1.584
	WEIGHT (LB/FT)	1.614
	MINIMUM BEND RADIUS (IN)	19
	BEND MOMENT (LB/FT)	N/A
	TENSILE STRENGTH (LB)	340
	CRUSH RESISTANCE, FOTP–41 (N/MM)	22
	STRENGTH MEMBER	NO
	OPERATING TEMPERATURE RANGE (LOW)	–40° C
	OPERATING TEMPERATURE RANGE (HIGH)	80° C
FIBER TYPE		LOW WATER PEAK SINGLE MODE LOOSE TUBE
FIBER STANDARD COMPLIANCE		ITU–T REC. G.652.D, G.657.A2
		IEC 60793–2–50 TYPE B.1.3 & TYPE B.6 A&B
FIBER COATING DIAMETER (um)		.242 +/– .007 OR .9 +/– .005 MM
FIBER COUNT		36
NUMBER OF FIBER SUBUNITS		1
FIBER COUNT EACH UNIT		36
FIBER OUTER JACKETS		FR JACKET
MAX ATTENUATION, 1310 NM (dB/Km)		LESS THAN/EQUALTO 0.5
MAX ATTENUATION, 1550 nm (dB/Km)		LESS THAN/EQUALTO 0.5

CABLE SPECIFICATIONS | SCALE: N.T.S. | 1

T-Mobile

AMERICAN TOWER®

POWDER RIVER Engineering Services, LLC
www.powderriverdev.com

BUSINESS LICENSE #: 3004

REVISIONS

REV	DATE	DESCRIPTION	INT
0	08/13/18	100% CONSTRUCTION	JPN
A	06/14/18	ISSUED FOR REVIEW 90%	SDA

8813 REGISTERED ARCHITECT
GLENN WALKER
STATE OF WASHINGTON
08/13/18

THESE PLANS AND SPECIFICATIONS, AS INSTRUMENTS OF SERVICE, ARE AND SHALL REMAIN THE PROPERTY OF POWDER RIVER DEVELOPMENT SERVICES, LLC WHETHER THE PROJECTS FOR WHICH THEY ARE MADE ARE EXECUTED OR NOT. THESE DRAWINGS AND SPECIFICATIONS SHALL NOT BE USED BY ANY PERSON OR ENTITY ON OTHER PROJECTS WITHOUT PRIOR WRITTEN CONSENT OF THE ENGINEER.

SITE INFORMATION

T-MOBILE #: PO02600A

ATC #: 310444

184 RATTLESNAKE RD.
CENTERVILLE, WA
98613

SHEET TITLE:

RFDS & CABLE SPECIFICATIONS

SHEET NUMBER:

C-3.1

THE INFORMATION CONTAINED IN THIS SET OF CONSTRUCTION DOCUMENTS IS PROPRIETARY BY NATURE. ANY USE OR DISCLOSURE OTHER THAN THAT WHICH RELATES TO CARRIER SERVICES IS STRICTLY PROHIBITED.

NOT USED | 5

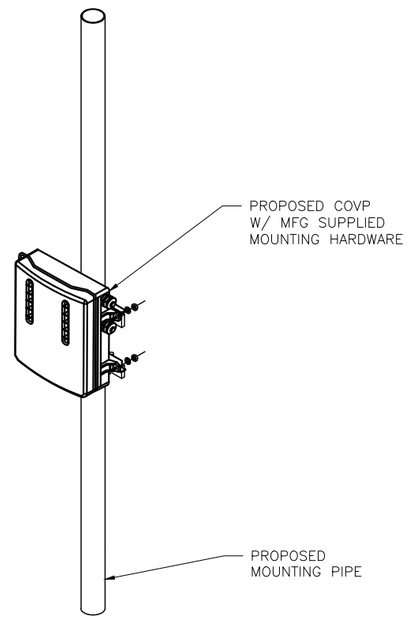

COVP MOUNTING DETAIL | SCALE: N.T.S. | 3

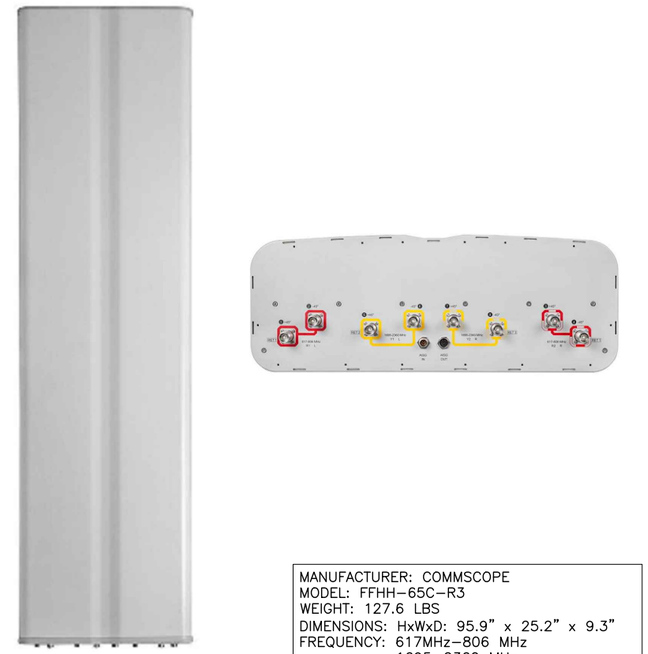

MANUFACTURER: COMMSCOPE
MODEL: FFHH-65C-R3
WEIGHT: 127.6 LBS
DIMENSIONS: HxWxD: 95.9" x 25.2" x 9.3"
FREQUENCY: 617MHz-806 MHz
1695-2360 MHz
CONNECTION: (8) 4.3-10 FEMALE

ANTENNA INFORMATION | SCALE: N.T.S. | 1

NOT USED | 6

DC Surge Protection for RRH/RFM (High-Capacity Junction Box)

ASU9338TYP01 (RNSNDC-7771-PF-48)

Overvoltage Protection & Fiber Management Junction Box

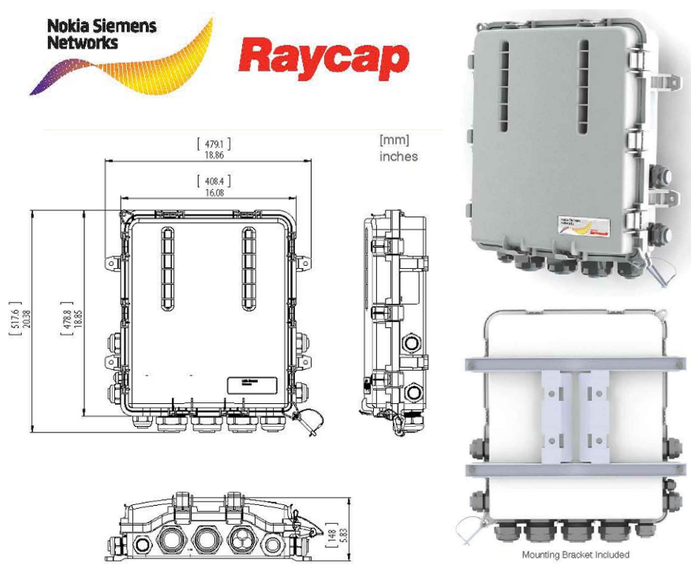

COVP DETAIL | SCALE: N.T.S. | 4

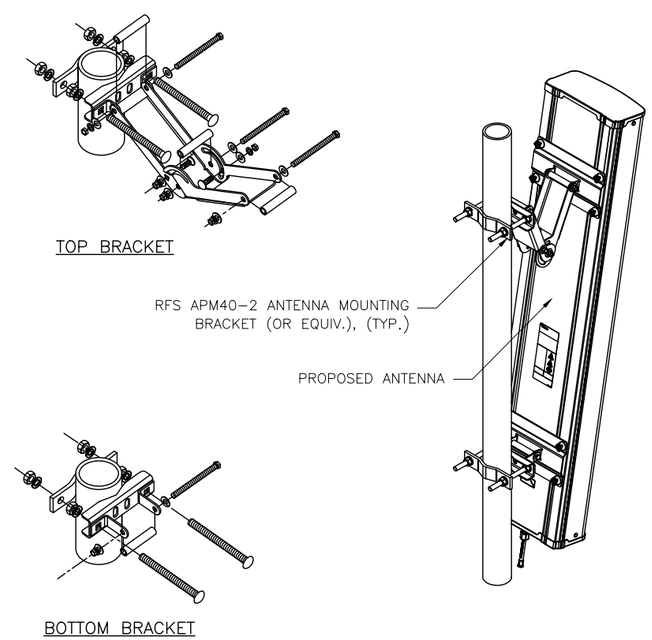

ANTENNA ATTACHMENT | SCALE: N.T.S. | 2

T-Mobile

AMERICAN TOWER®

POWDER RIVER
Engineering Services, LLC
www.powderriverdev.com

BUSINESS LICENSE #: 3004

REVISIONS

REV	DATE	DESCRIPTION	INT
0	08/13/18	100% CONSTRUCTION	JPN
A	06/14/18	ISSUED FOR REVIEW 90%	SDA

8813
REGISTERED ARCHITECT
GLENN WALKER
STATE OF WASHINGTON
08/13/18

THESE PLANS AND SPECIFICATIONS, AS INSTRUMENTS OF SERVICE, ARE AND SHALL REMAIN THE PROPERTY OF POWDER RIVER DEVELOPMENT SERVICES, LLC WHETHER THE PROJECTS FOR WHICH THEY ARE MADE ARE EXECUTED OR NOT. THESE DRAWINGS AND SPECIFICATIONS SHALL NOT BE USED BY ANY PERSON OR ENTITY ON OTHER PROJECTS WITHOUT PRIOR WRITTEN CONSENT OF THE ENGINEER.

SITE INFORMATION

T-MOBILE #: PO02600A

ATC #: 310444

**184 RATTLESNAKE RD.
CENTERVILLE, WA
98613**

SHEET TITLE:

EQUIPMENT DETAILS

SHEET NUMBER:

C-4

THE INFORMATION CONTAINED IN THIS SET OF CONSTRUCTION DOCUMENTS IS PROPRIETARY BY NATURE. ANY USE OR DISCLOSURE OTHER THAN THAT WHICH RELATES TO CARRIER SERVICES IS STRICTLY PROHIBITED.

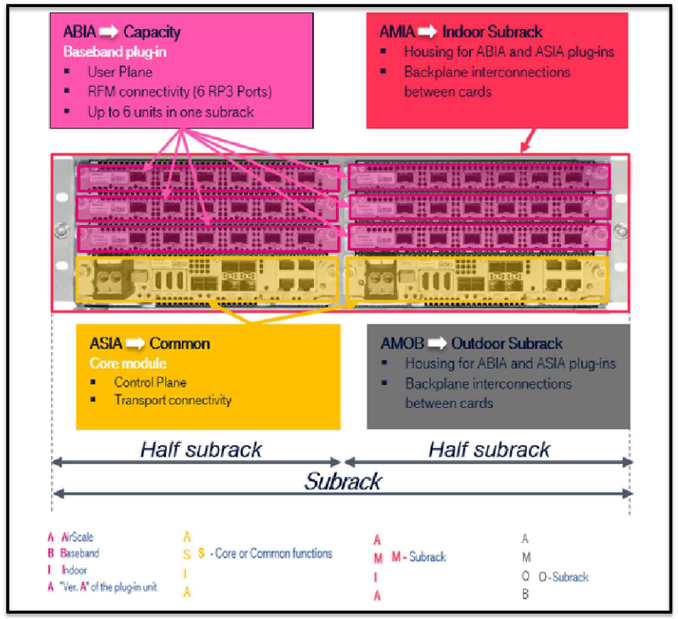

One Subrack Indoor Maximum configuration :

- 6 ABIA +2 ASIA +1 AMIA
- IP20 rating (Indoor)

One Subrack Outdoor Maximum configuration :

- 6 ABIA +2 ASIA +1 AMOB
- IP65 rating

No boots on ASIA and ABIA fiber/power/Ethernet connectors

NOTE: No power connections for Radio Module units

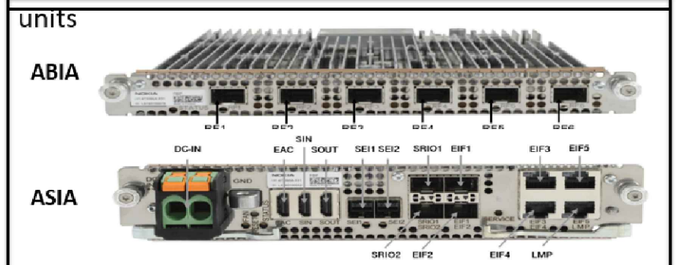

NOT USED | 4

ASIA / ABIA DETAIL | SCALE: N.T.S. | 1

NOKIA

AHLOA: 600MHz/700MHz Radio (4Tx4Rx RRH)

Specification	
Configuration	4T4R Dual Band
Output Power	4x30W
IBW/OBW	Full Band/Full Band
PIM Cancellation	Yes (Multi Band)
Power Sharing	Yes
Weight	83.7 lbs with no covers & brackets
Size	Approx 32.6L
Dimensions	560 mm x 308 mm x 189 mm
Connector	4.3-10+ (4 ports)

AHLOA

- Based on Airscale Platform
- Tower installation only (No Ground installation)
- License requirement for MIMO Functions and Dual Band
- Utilizes 4.3-10 RF Connector
- CPRI fiber front haul
- Product expected Q2 2018

NOT USED | 5

RADIO INFORMATION | SCALE: N.T.S. | 3

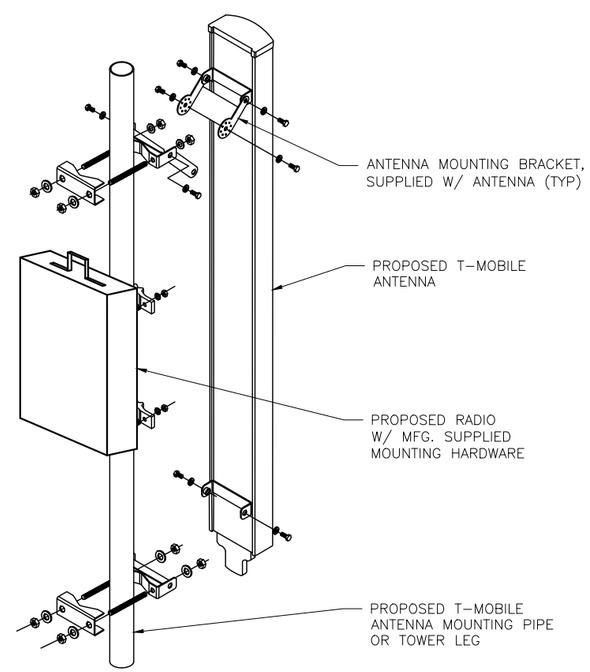

RADIO MOUNTING DETAIL | SCALE: N.T.S. | 2

T-Mobile

AMERICAN TOWER®

POWDER RIVER
Engineering Services, LLC
www.powderriverdev.com

BUSINESS LICENSE #: 3004

REVISIONS

REV	DATE	DESCRIPTION	INT
0	08/13/18	100% CONSTRUCTION	JPN
A	06/14/18	ISSUED FOR REVIEW 90%	SDA

8813 REGISTERED ARCHITECT
GLENN WALKER
STATE OF WASHINGTON
08/13/18

THESE PLANS AND SPECIFICATIONS, AS INSTRUMENTS OF SERVICE, ARE AND SHALL REMAIN THE PROPERTY OF POWDER RIVER DEVELOPMENT SERVICES, LLC WHETHER THE PROJECTS FOR WHICH THEY ARE MADE ARE EXECUTED OR NOT. THESE DRAWINGS AND SPECIFICATIONS SHALL NOT BE USED BY ANY PERSON OR ENTITY ON OTHER PROJECTS WITHOUT PRIOR WRITTEN CONSENT OF THE ENGINEER.

SITE INFORMATION

T-MOBILE #: PO02600A

ATC #: 310444

184 RATTLESNAKE RD.
CENTERVILLE, WA
98613

SHEET TITLE:

EQUIPMENT DETAILS

SHEET NUMBER:

C-5

THE INFORMATION CONTAINED IN THIS SET OF CONSTRUCTION DOCUMENTS IS PROPRIETARY BY NATURE. ANY USE OR DISCLOSURE OTHER THAN THAT WHICH RELATES TO CARRIER SERVICES IS STRICTLY PROHIBITED.

NSN Flexi Outdoor Cabinet

NSN Flexi Cabinet

NSN Flexi Outdoor Cabinet

Cabinet will be delivered with custom configuration

DESCRIPTION	PART NUMBER
FCOA CABINET	470142A
WPUC *(power distribution unit)*	469955A
WPMC *(wideband power unit)*	469956A

TECHNICAL SPECIFICATION

Module Type	Input Voltage	Output Voltage
WPUC	230 Vac / 36A	44 – 56 VDC / 6000W
WPMC	200 – 250 Vac / 9A	44 – 56 VDC / 1500W

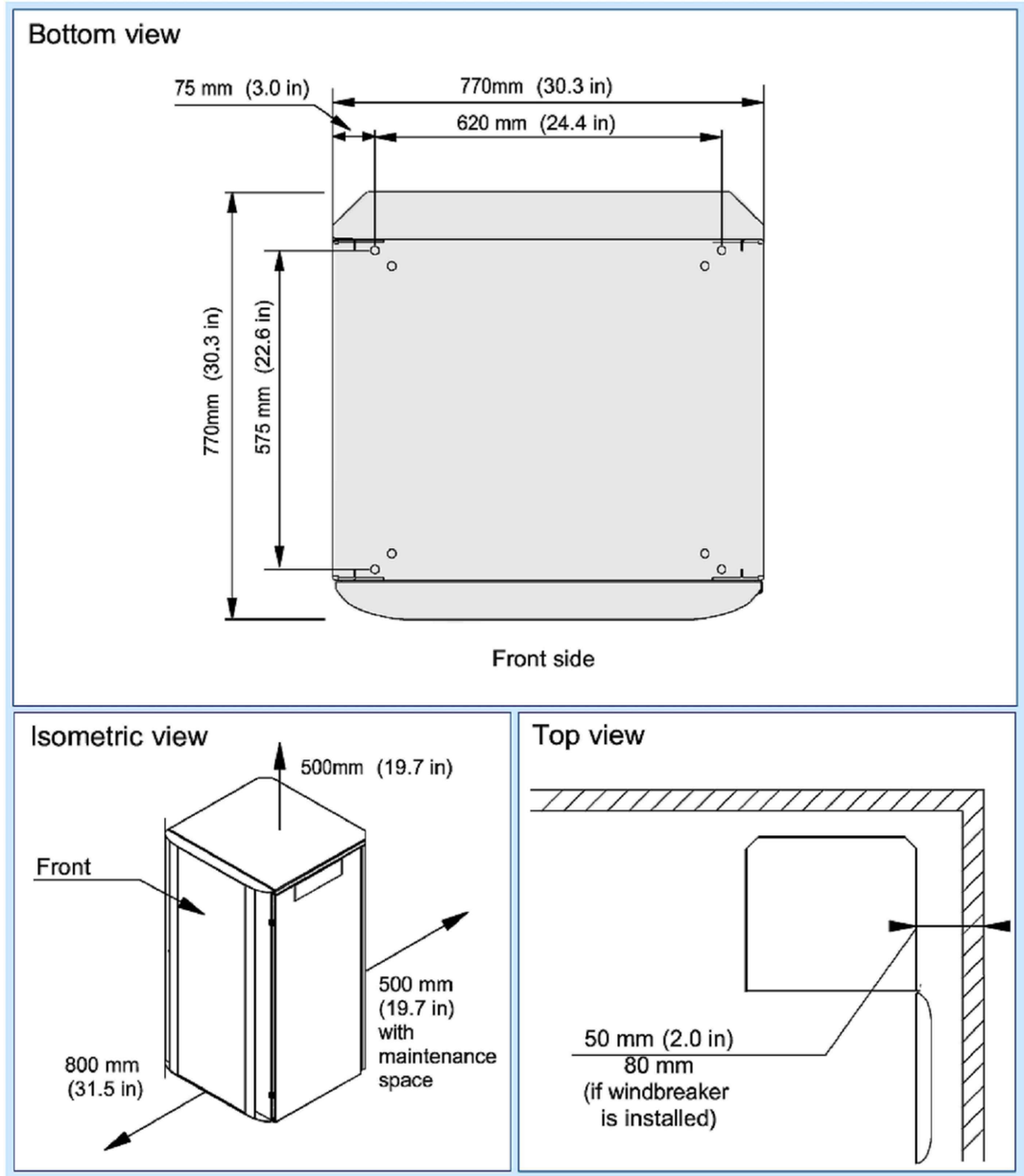

DN7067652

T-Mobile

AMERICAN TOWER®

POWDER RIVER Engineering Services, LLC
www.powderriverdev.com

BUSINESS LICENSE #: 3004

REVISIONS

REV	DATE	DESCRIPTION	INT
0	08/13/18	100% CONSTRUCTION	JPN
A	06/14/18	ISSUED FOR REVIEW 90%	SDA

8813 REGISTERED ARCHITECT
GLENN WALKER
STATE OF WASHINGTON
08/13/18

THESE PLANS AND SPECIFICATIONS, AS INSTRUMENTS OF SERVICE, ARE AND SHALL REMAIN THE PROPERTY OF POWDER RIVER DEVELOPMENT SERVICES, LLC WHETHER THE PROJECTS FOR WHICH THEY ARE MADE ARE EXECUTED OR NOT. THESE DRAWINGS AND SPECIFICATIONS SHALL NOT BE USED BY ANY PERSON OR ENTITY ON OTHER PROJECTS WITHOUT PRIOR WRITTEN CONSENT OF THE ENGINEER.

SITE INFORMATION

T-MOBILE #: PO02600A

ATC #: 310444

184 RATTLESNAKE RD.
CENTERVILLE, WA
98613

SHEET TITLE:

CABINET DETAIL

SHEET NUMBER:

C-6

THE INFORMATION CONTAINED IN THIS SET OF CONSTRUCTION DOCUMENTS IS PROPRIETARY BY NATURE. ANY USE OR DISCLOSURE OTHER THAN THAT WHICH RELATES TO CARRIER SERVICES IS STRICTLY PROHIBITED.

NOTE: THE GROUNDING PLAN PROVIDED HEREIN IS SCHEMATIC BY NATURE. REFER TO GROUNDING NOTES ON SHEET GN-2 FOR ADDITIONAL INFORMATION AND REQUIREMENTS.

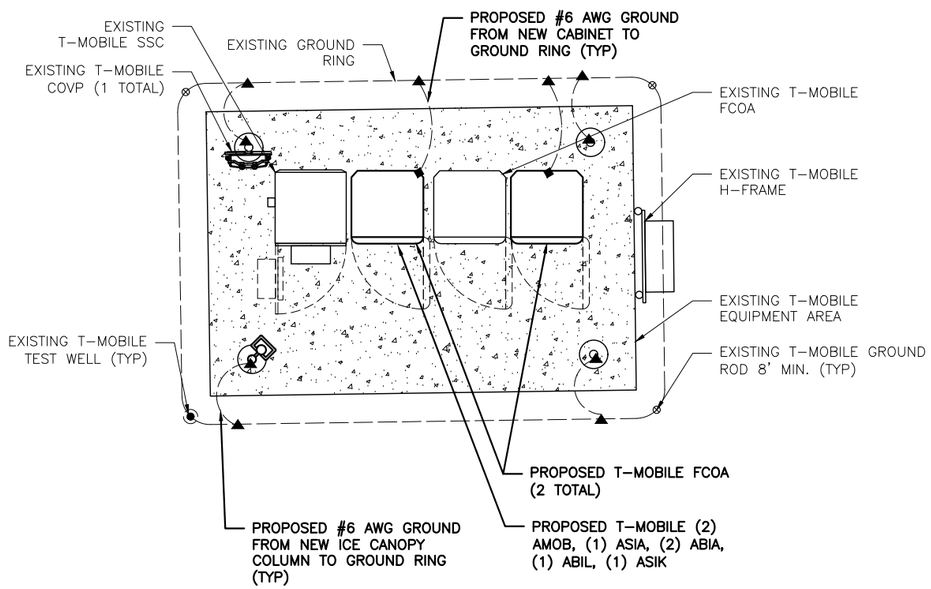

LEGEND:

------ GROUND WIRE

▲ CADWELD CONNECTION (EXOTHERMIC WELD)

■ MECHANICAL CONNECTION

⊗ GROUND ROD

● TEST WELL

N

EQUIPMENT GROUNDING PLAN (TYPICAL) | SCALE: N.T.S. | 2

NOTE: THE GROUNDING PLAN PROVIDED HEREIN IS SCHEMATIC BY NATURE. REFER TO GROUNDING NOTES ON SHEET GN-2 FOR ADDITIONAL INFORMATION AND REQUIREMENTS.

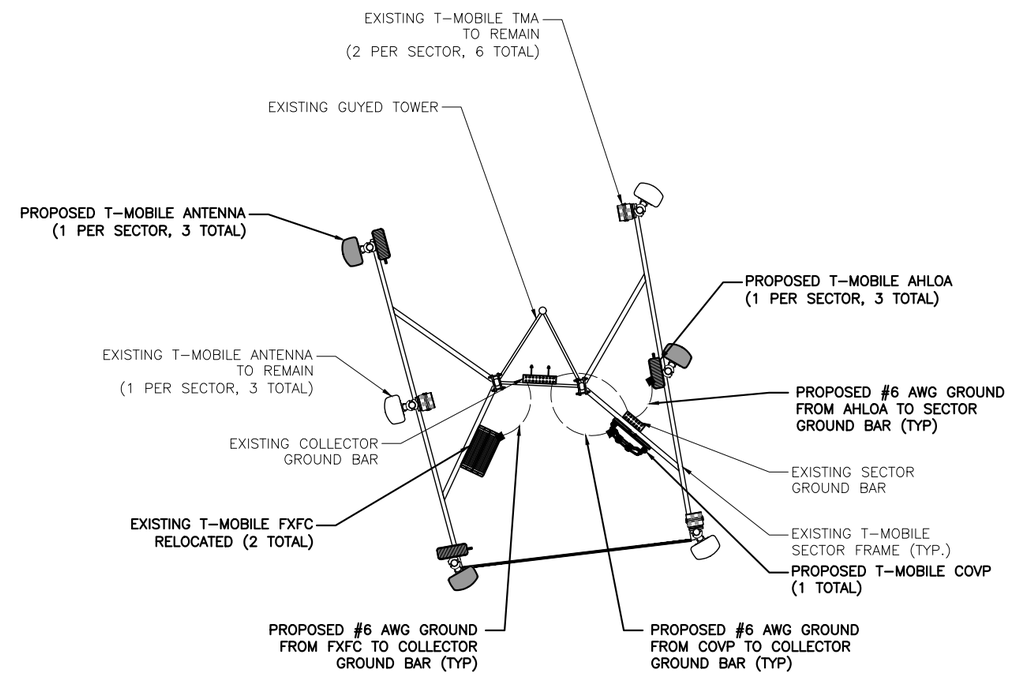

LEGEND:

------ GROUND WIRE

■ MECHANICAL CONNECTION

N

ANTENNA GROUNDING PLAN (TYPICAL) | SCALE: N.T.S. | 1

T-Mobile

AMERICAN TOWER®

POWDER RIVER
Engineering Services, LLC
www.powderriverdev.com

BUSINESS LICENSE #: 3004

REVISIONS

REV	DATE	DESCRIPTION	INT
0	08/13/18	100% CONSTRUCTION	JPN
A	06/14/18	ISSUED FOR REVIEW 90%	SDA

8813
REGISTERED ARCHITECT
GLENN WALKER
STATE OF WASHINGTON
08/13/18

THESE PLANS AND SPECIFICATIONS, AS INSTRUMENTS OF SERVICE, ARE AND SHALL REMAIN THE PROPERTY OF POWDER RIVER DEVELOPMENT SERVICES, LLC WHETHER THE PROJECTS FOR WHICH THEY ARE MADE ARE EXECUTED OR NOT. THESE DRAWINGS AND SPECIFICATIONS SHALL NOT BE USED BY ANY PERSON OR ENTITY ON OTHER PROJECTS WITHOUT PRIOR WRITTEN CONSENT OF THE ENGINEER.

SITE INFORMATION

T-MOBILE #: PO02600A

ATC #: 310444

184 RATTLESNAKE RD.
CENTERVILLE, WA
98613

SHEET TITLE:

GROUNDING PLANS

SHEET NUMBER:

G-1

THE INFORMATION CONTAINED IN THIS SET OF CONSTRUCTION DOCUMENTS IS PROPRIETARY BY NATURE. ANY USE OR DISCLOSURE OTHER THAN THAT WHICH RELATES TO CARRIER SERVICES IS STRICTLY PROHIBITED.

NOT USED | 5

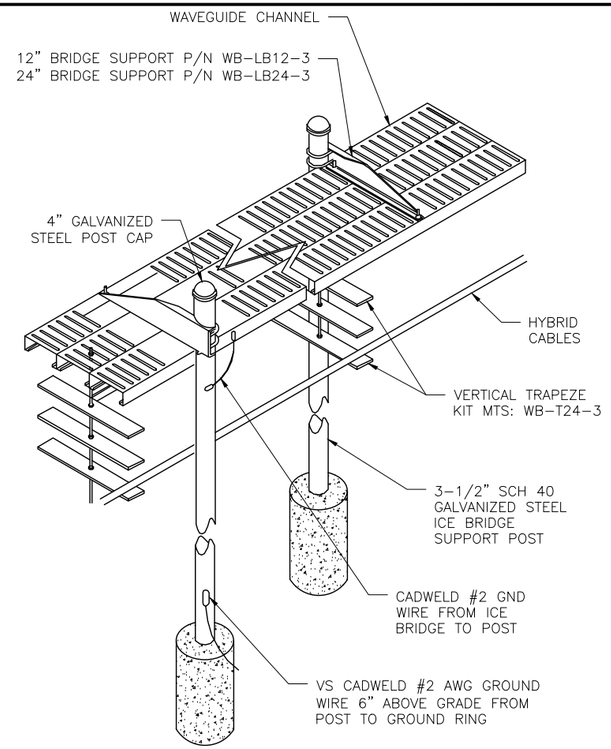

ICE CANOPY & CANOPY POST GROUNDING DETAIL | 3

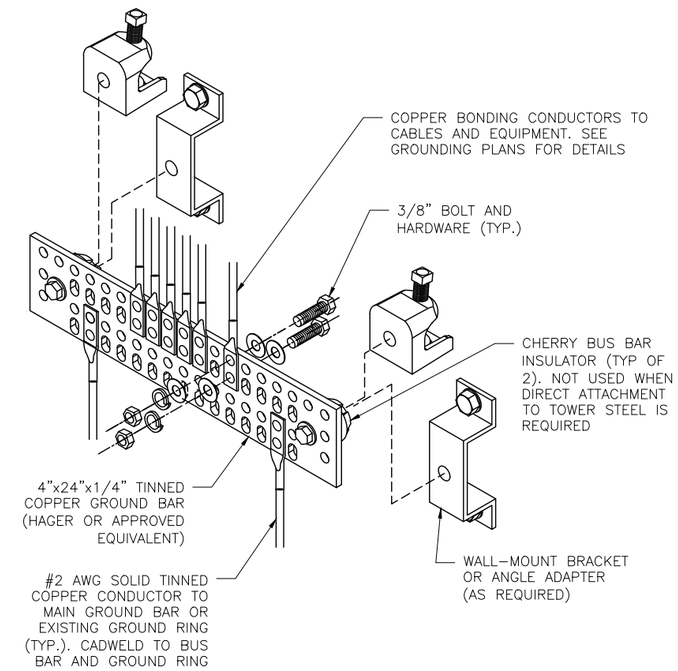

GROUND BAR DETAIL | SCALE: N.T.S. | 1

NOT USED | 6

NOTES:

1. CADWELD "TYPES" SHOWN ARE EXAMPLES. CONSULT WITH CONSTRUCTION MANAGER FOR SPECIFIC TYPES OF CADWELDS TO BE USED FOR THIS PROJECT.
2. CONFIRM WITH TOWER OWNER THAT THE USE OF CADWELDS IS ACCEPTABLE, PRIOR TO INSTALLATION.

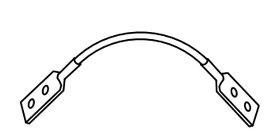

TYPE 2-YA-2

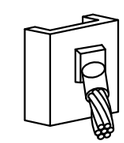

TYPE VS

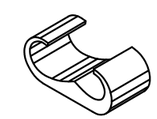

TYPE YGHC

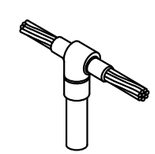

TYPE GT

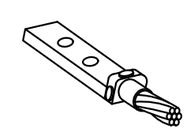

TYPE YA-2

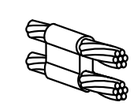

TYPE PT

NOT USED | 4

CADWELD CONNECTION TYPES | SCALE: N.T.S. | 2

THE INFORMATION CONTAINED IN THIS SET OF CONSTRUCTION DOCUMENTS IS PROPRIETARY BY NATURE. ANY USE OR DISCLOSURE OTHER THAN THAT WHICH RELATES TO CARRIER SERVICES IS STRICTLY PROHIBITED.

T-Mobile

AMERICAN TOWER®

POWDER RIVER
Engineering Services, LLC
www.powderriverdev.com

BUSINESS LICENSE #: 3004

REVISIONS

REV	DATE	DESCRIPTION	INT
0	08/13/18	100% CONSTRUCTION	JPN
A	06/14/18	ISSUED FOR REVIEW 90%	SDA

8813
REGISTERED ARCHITECT
GLENN WALKER
STATE OF WASHINGTON
08/13/18

THESE PLANS AND SPECIFICATIONS, AS INSTRUMENTS OF SERVICE, ARE AND SHALL REMAIN THE PROPERTY OF POWDER RIVER DEVELOPMENT SERVICES, LLC WHETHER THE PROJECTS FOR WHICH THEY ARE MADE ARE EXECUTED OR NOT. THESE DRAWINGS AND SPECIFICATIONS SHALL NOT BE USED BY ANY PERSON OR ENTITY ON OTHER PROJECTS WITHOUT PRIOR WRITTEN CONSENT OF THE ENGINEER.

SITE INFORMATION

T-MOBILE #: PO02600A

ATC #: 310444

184 RATTLESNAKE RD.
CENTERVILLE, WA
98613

SHEET TITLE:
GROUNDING DETAILS

SHEET NUMBER:
G-2

STATEMENT OF ENCROACHMENTS

The Surveyor did not observe any visible encroachments on site of the subject property.

NOTES CORRESPONDING TO SCHEDULE "B"

The following exceptions items are the same as noted in OLD REPUBLIC TITLE RESIDENTIAL INFORMATION SERVICES OWNERSHIP AND ENCUMBRANCE REPORT ORT#01-14014941-015

1. *(1) SURVEY, AS RECORDED IN PLAT DOCUMENT NO. 1026343 OF KLICKITAT COUNTY RECORDS.* ***AFFECTS SUBJECT PROPERTY AS EXHIBIT B-1 DELETED IN SECOND AMENDMENT TO THE COMMUNICATION SITE LEASE DATED SEPTEMBER 3, 1998***

2. *(2) MEMORANDUM OF LEASE AGREEMENT BY AND BETWEEN ARTHUR N. JAEKEL AND WENDY HALL AKA WENDY D. JAEKEL, LESSOR(S) AND NEXTEL WEST CORP. LESSEE(S), RECORDED 10/16/2001, AS DOCUMENT NO. 1026324 OF THE KLICKITAT COUNTY RECORDS.*

   NOTE: ASSIGNMENT OF LEASES, BY AND BETWEEN NEXTEL WEST CORP., ASSIGNOR, AND TOWER PARENT CORP., ASSIGNEE, RECORDED 10/16/2001, AS DOCUMENT NO. 1026325 OF KLICKITAT COUNTY RECORDS.

   NOTE: ASSIGNMENT OF LEASES, BY AND BETWEEN TOWER PARENT CORP., ASSIGNOR, AND TOWER ASSET SUB, INC., ASSIGNEE, RECORDED 10/16/2001, AS DOCUMENT NO. 1026326 OF KLICKITAT COUNTY RECORDS. ***AFFECTS SUBJECT PROPERTY AS THE PARENT PARCEL AND EASEMENT AREA DESCRIBED.***

3. *(3) MEMORANDUM OF LEASE BY AND BETWEEN STATE OF WASHINGTON, ACTING BY AND THROUGH THE WASHINGTON STATE DEPARTMENT OF TRANSPORTATION, LESSOR(S) AND SCOTT ALAN HALL AND WENDY D. JAECKEL-HALL, LESSEE(S) RECORDED 07/31/2001, AS DOCUMENT NO. 1024929 OF THE KLICKITAT COUNTY RECORDS.*

   NOTE: ASSIGNMENT AND ASSUMPTION OF LEASE, RECORDED 10/22/2009, AS DOCUMENT NO. 1085581 OF KLICKITAT COUNTY RECORDS.

   NOTE: ASSIGNMENT AND ASSUMPTION OF LEASE, RECORDED 10/22/2009, AS DOCUMENT NO. 1085582 OF KLICKITAT COUNTY RECORDS. ***AFFECTS SUBJECT PROPERTY AS THE EASEMENT AREA DESCRIBED.***

4. *(4) MEMORANDUM OF LEASE BY AND BETWEEN SCOTT ALAN HALL AND WENDY D. JAEKEL-HALL, LESSOR(S) AND WASHINGTON STATE DEPARTMENT OF TRANSPORTATION, LESSEE(S), RECORDED 06/22/2005, AS DOCUMENT NO. 1054580 OF THE KLICKITAT COUNTY* ***AFFECTS SUBJECT PROPERTY AS EXHIBIT B-1 DELETED IN SECOND AMENDMENT TO THE COMMUNICATION SITE LEASE DATED SEPTEMBER 3, 1998 RECORDS.***

5. *(5) LICENSE AGREEMENT, BY AND BETWEEN TOWER ASSET SUB, LLC AND WASHINGTON STATE PATROL, RECORDED 02/09/2007 AS DOCUMENT NO. 1068085 OF KLICKITAT COUNTY RECORDS.* ***PROPERTY IS SUBJECT TO AGREEMENT CONTAINED THEREIN.***

6. *(6) MEMORANDUM OF LEASE BY AND BETWEEN SCOTT HALL AND WENDY HALL, LESSOR(S) AND UNION PACIFIC RAILROAD COMPANY, LESSEE(S), RECORDED 11/08/2011, AS DOCUMENT NO. 1095446 OF THE KLICKITAT COUNTY RECORDS.* ***AFFECTS THE PARENT PARCEL AS THE UPRR LEASE PARCEL. DOES NOT AFFECT THE LEASE PAECEL.***

UTILITY NOTES

[11a] The aboveground utilities shown have been located from field survey information only. The surveyor makes no guarantee that the utilities shown comprise all such utilities in the area, either in service or abandoned. The surveyor further certifies that they are located as accurately as possible from the field information obtained.

[11b] The underground utilities shown have been located from field survey information and existing drawings. The surveyor makes no guarantee that the underground utilities shown comprise all such utilities in the area, either in service or abandoned. The surveyor further does not guarantee that the underground utilities shown are in the exact location indicated although the surveyor does certify that they are located as accurately as possible from information available. The surveyor has not physically located the underground utilities.

GENERAL NOTES

1. *The Easement Parcel has has indirect ingress and egress to Ritzschker Road, which is a Dirt Public Road.*
2. *No address was physically observed, posted on site of subject property.*
3. *All field measurements matched record dimensions within the precision requirements of ALTA/ACSM specifications unless otherwise shown.*
4. *There is no observable evidence of earth moving work, building construction or building additions within recent months on the Easement parcel.*
5. *There are no changes in street right-of-way lines either completed or proposed to the best of our knowledge, and available from the controlling jurisdiction.*
6. *There is no observable evidence of recent street or sidewalk construction or repairs.*
7. *There is no observable evidence of Easement Parcel use as a solid waste dump, sump, sanitary landfill or cemetery.*
8. *The Easement Area APN: 021503000006.00, Owners: Scott Allan Hall and Wendy D. Jaekel-Hall (Husband and Wife) contains 10,000.00 square feet or 0.230 acres, more or less,*
9. *The Easement Area boundary mathematically closes without any gaps, gores, or overlaps.*
10. *This survey is for the purpose of identifying the boundaries of the Lease Parcel as shown hereon. This does not constitute a survey of the parent parcel. The record boundary information shown hereon is for reference only.*

FLOOD NOTE

Based on maps prepared by the Federal Emergency Management Agency (FEMA) available on line at www.msc.fema.gov, and by graphic plotting only, this property is located in Zone "C" on Flood Insurance Rate Map Number 53009904258, which bears an effective date of 07/02/1981 and IS NOT in a Special Flood Hazard Area. By reviewing flood maps provided by the National Flood Insurance Program we have learned this community DOES participate in the program. No field surveying was performed to determine this zone and an elevation certificate may be needed to verify the accuracy of the maps and/or to apply for a variance from the Federal Emergency Management Agency.

ZONING NOTES

Surveyor was not provided with the current zoning information at the time of survey.

BASIS OF BEARINGS

The bearing of N 88°54'18" E, (Per Memorandum of Lease Doc.# 1085582) as shown on the South line of Section 3, was used as the basis of bearings for the purpose of this survey.

EASEMENT AREA

Easement Area contains 10,000.00 square feet, or 0.230 acres, more or less.
Parent Parcel Not Surveyed

PARKING STALLS

Regular spaces:	*0*
Handicapped spaces:	*0*
Total spaces:	*0*

LEGEND

- ● - MONUMENT FOUND (AS DESCRIBED)
- ○ - GUARD POST
- (← - GUY WIRE
- —x—x— - CHAINLINK FENCE
- P.O.B. - POINT OF BEGINNING
- P.O.C. - POINT OF COMMENCEMENT
- - UTILITY RACK

LEGAL DESCRIPTION

PARENT PARCEL DESCRIPTION *(AS PROVIDED IN OLD REPUBLIC TITLE RESIDENTIAL INFORMATION SERVICES OWNERSHIP AND ENCUMBRANCE REPORT ORT# 01-14014941-015 DATED 2/28/2014)*
A PORTION OF THE SOUTHEAST QUARTER SECTION 3, TOWNSHIP 2 NORTH, RANGE 15 EAST, W.M., KLICKITAT COUNTY, WASHINGTON.
AS TO PARCEL NO. 021503000006.00

SITUATED IN THE COUNTY OF KLICKITAT AND STATE OF WASHINGTON:
LOT 1 IN SECTION 3, TOWNSHIP 2 NORTH AND RANGE 15 EAST OF KLICKITAT AND STATE OF WASHINGTON.
AS TO PARCEL NO. 021503000006.00

LEASE PARCEL: (AS PROVIDED IN ASSIGNMENT AND ASSUMPTION OF LEASE RECORDED 10/22/2009 AS DOCUMENT NO. 1085582 OF KLICKITAT COUNTY RECORDS.)
A TRACT OF LAND SITUATED IN THE SOUTHEAST QUARTER OF SECTION 3, TOWNSHIP 2 NORTH, RANGE 15 EAST, W. M. KLICKITAT COUNTY, WASHINGTON.
COMMENCING AT A POINT ON THE SOUTH LINE OF SECTION 3, SAID POINT BEING THE NORTHEAST CORNER OF A .230 ACRE B.N.R.R. LEASE SITE AS SHOWN ON A SURVEY RECORDED AS AUDITOR'S NO. 202771 (BOOK 7, PAGE 31) KLICKITAT COUNTY SURVEY RECORDS;
THENCE NORTH 88°54'18" EAST ALONG THE SOUTH LINE OF SAID SECTION 3, 175.00 FEET TO THE SOUTHEAST CORNER OF THE UNION PACIFIC RAILROAD SITE AS SHOWN ON SAID SURVEY; THENCE ALONG THE EAST LINE OF SAID SITE; NORTH 01°05'42" WEST 100.00 FEET; THENCE ALONG THE NORTH LINE OF SAID SITE, SOUTH 88°54'18" WEST, 18.53 FEET; THENCE NORTH 01°05'42" WEST, 18.80 FEET TO THE POINT OF BEGINNING;
THENCE SOUTH 88°54'18" WEST, 100.0 FEET; THENCE NORTH 01°05'42" WEST, 100.00 FEET;
THENCE NORTH 88°54'18" EAST, 100.00 FEET; THENCE SOUTH 01°05'42" EAST 100.00 FEET TO THE POINT OF BEGINNING, CONTAINS 10,000 SQUARE FEET, MORE OR LESS.

EASEMENT AREA (AS SURVEYED.)
A TRACT OF LAND LYING IN AND BEING A PART OF PARCEL NO. 021503000006.00, SITUATED IN THE SOUTHEAST QUARTER OF SECTION 3, TOWNSHIP 2 NORTH, RANGE 15 EAST, W. M. KLICKITAT COUNTY, WASHINGTON.
COMMENCING AT A 5/8" IRON PIN FOUND ON THE SOUTH LINE OF SAID SOUTHEAST QUARTER FOR THE THE NORTHEAST CORNER OF A .230 ACRE B.N.R.R. LEASE SITE AS SHOWN ON A SURVEY RECORDED AS AUDITOR'S NO. 202771 (BOOK 7, PAGE 31) KLICKITAT COUNTY SURVEY RECORDS;
THENCE NORTH 88°54'18" EAST ALONG THE SAID SOUTH LINE OF SAID SECTION 3, A DISTANCE OF 175.00 FEET TO A POINT FOR THE SOUTHEAST CORNER OF THE UNION PACIFIC RAILROAD SITE AS SHOWN ON SURVEY; THENCE ALONG THE EAST LINE OF SAID SITE, NORTH 01°05'42" WEST, 100.00 FEET; THENCE ALONG THE NORTH LINE OF SAID SITE, SOUTH 88°54'18" WEST, 17.68 FEET; THENCE NORTH 01°05'42" WEST, 18.80 FEET TO A POINT FOR THE SOUTHEAST CORNER AND POINT OF BEGINNING OF THE HEREIN DESCRIBED TRACT; THENCE SOUTH 88°54'18" WEST, A DISTANCE OF 100.00 FEET TO A POINT FOR THE SOUTHWEST CORNER; THENCE NORTH 01°05'42" WEST, 100.00 FEET TO A POINT FOR THE NORTHWEST CORNER; THENCE NORTH 88°54'18" EAST, A DISTANCE OF 100.00 FEET TO A POINT FOR THE NORTHEAST CORNER; THENCE SOUTH 01°05'42" EAST 100.00 FEET TO THE POINT OF BEGINNING, CONTAINING 10,000 SQUARE FEET OR 0.230 ACRES, MORE OR LESS.

20' ACCESS EASEMENT (AS SURVEYED)
A 20.00 FOOT WIDE EASEMENT FOR INGRESS AND EGRESS CROSSING A PART OF PARCEL NO. 021503000006.00, SITUATED IN THE SOUTHEAST QUARTER OF SECTION 3, TOWNSHIP 2 NORTH, RANGE 15 EAST, W. M., KLICKITAT COUNTY, WASHINGTON, SAID EASEMENT BEING 10.00 FEET ON EASH SIDE OF THE FOLLOWING DESCRIBED CENTERLINE.
COMMENCING AT A 5/8" IRON PIN FOUND ON THE SOUTH LINE OF SAID SOUTHEAST QUARTER FOR THE THE NORTHEAST CORNER OF A .230 ACRE B.N.R.R. LEASE SITE AS SHOWN ON A SURVEY RECORDED AS AUDITOR'S NO. 202771 (BOOK 7, PAGE 31) KLICKITAT COUNTY SURVEY RECORDS;
THENCE NORTH 88°54'18" EAST ALONG THE SAID SOUTH LINE OF SAID SECTION 3, A DISTANCE OF 175.00 FEET TO A POINT FOR THE SOUTHEAST CORNER OF THE UNION PACIFIC RAILROAD SITE AS SHOWN ON SURVEY; THENCE ALONG THE EAST LINE OF SAID SITE, NORTH 01°05'42" WEST, 100.00 FEET; THENCE ALONG THE NORTH LINE OF SAID SITE, SOUTH 88°54'18" WEST, 17.68 FEET; THENCE NORTH 01°05'42" WEST, A DISTANCE OF 50.93 TO THE POINT OF BEGINNING OF THE HEREIN DESCRIBED CENTERLINE; THENCE NORTH 84°58'07" EAST, A DISTANCE OF 53.72 FEET TO THE POINT OF TERMINATION IN THE CENTERLINE OF RITZSCHKER ROAD A PUBLIC RIGHT OF WAY.
SIDELINES FOR SAID EASEMENT ARE TO BE EXTENDED OR SHORTENED SUCH AS TO BEGIN ON THE EAST LINE OF THE 0.230 ACRE LEASE PARCEL AND TERMINATE AT THE CENTERLINE OF RITZCHKER ROAD, A PUBLIC RIGHT OF WAY.

PARENT PARCEL DETAIL

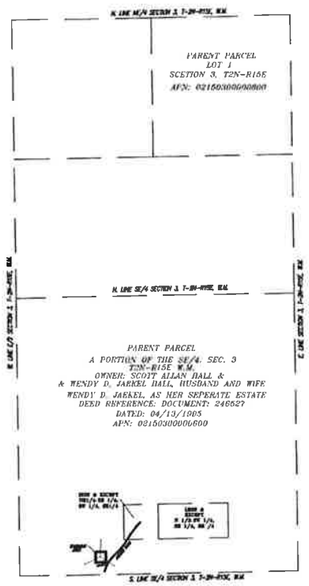

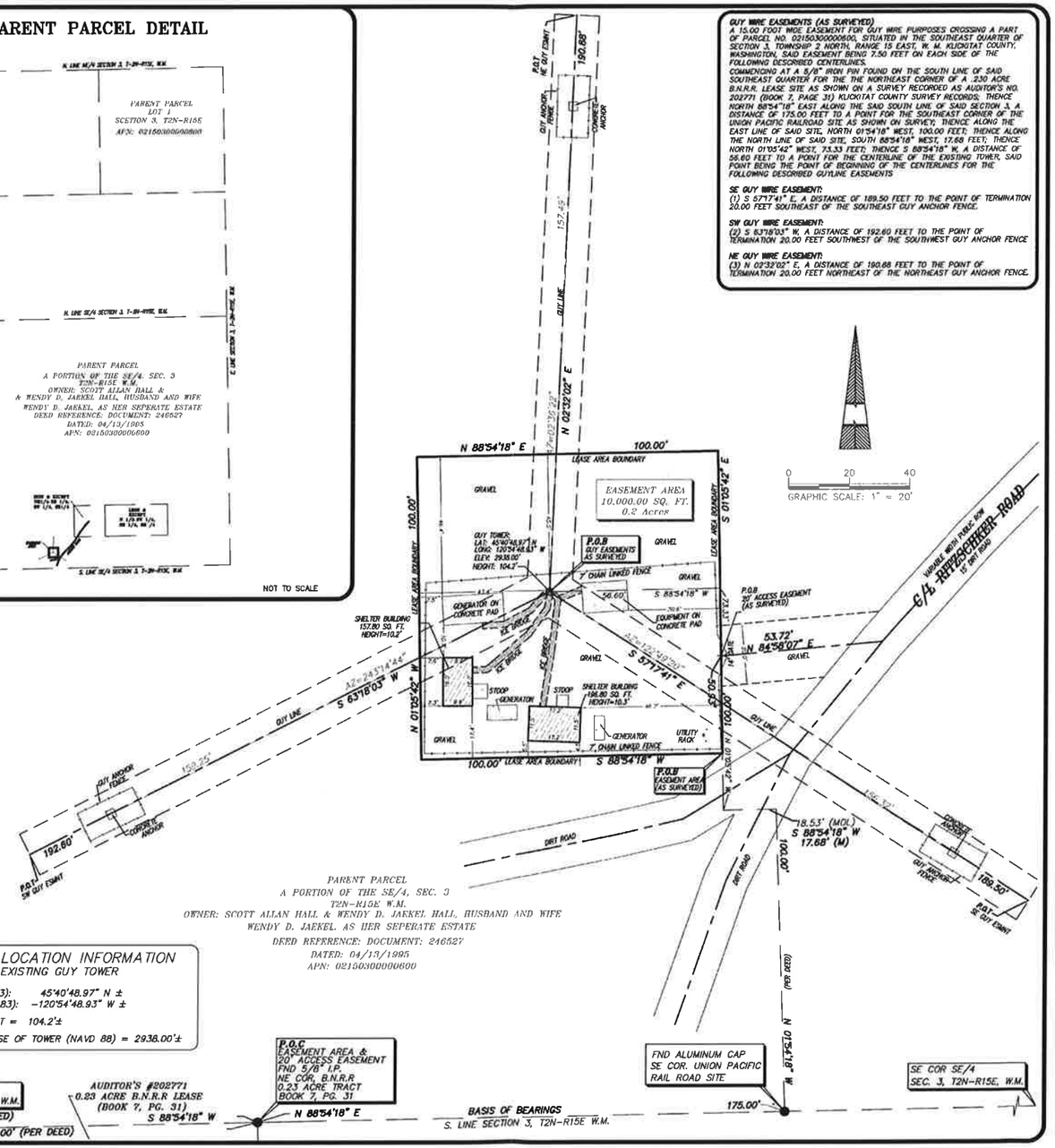

SHEET TITLE
AS-BUILT SURVEY

PROJECT
310444 Haystack
184 Rattlesnake Road
Centerville, WA 98613

AS-BUILT SURVEY

SURVEYOR'S CERTIFICATE:

To: American Towers LLC AND Old Republic Title National Title Insurance Company.

THIS ASBUILT SURVEY WAS PERFORMED UNDER MY DIRECT SUPERVISION AND MEETS OR EXCEEDS THE MINIMUM STANDARDS FOR LAND SURVEYS AS DEFINED BY THE WASHINGTON BOARD OF REGISTRATION FOR PROFESSIONAL ENGINEERS AND LAND SURVEYORS.
Date of Plat or Map: 8/12/2014

Anthony C. Benthin, PLS
PLS No.: 32632
In the State of: Washington
Date of Survey: 3/19/2014

08/12/14

RED PLAINS SURVEYING COMPANY
Prepared By:
Red Plains Surveying Company
1917 S. Harvard Avenue
Oklahoma City, OK. 73128
Phone: 405-603-7842 / Fax: 405-603-7852
Email: Comments@rpsurveying.com

DRAWN BY: FC
CHECKED BY: DK
PROJECT NO. N03062T

NO.	DATE	REVISION
6.	5/2/2014	ORDDS COMMENTS
2.	4/2/2014	ORDDS COMMENTS
3.	4/11/2014	ORDDS COMMENTS
4.	4/15/2014	ORDDS COMMENTS
5.	4/23/2014	ORDDS COMMENTS

COORDINATED BY:

OLD REPUBLIC COMMERCIAL DUE DILIGENCE SERVICES
A DIVISION OF THE OLD REPUBLIC TITLE INSURANCE GROUP
Preston Park Financial Center East
4965 Preston Park Blvd #620
Plano, TX 75093
P:(972) 943-5300 F:(972) 943-5339

PROJECT NUMBER
140615-S

SHEET
1 OF 1

COPYRIGHT©2013, OLD REPUBLIC SITE MANAGEMENT SERVICES. ALL RIGHTS RESERVED.

Aerial Views of Site:

45.68011, -120.91355

LED Work Lights. Similar models to be installed at site.